studio full access®
CABINET SERIES

Williams Distributing

CABINET SPECIFICATIONS

2019 - 2020

An acpi. brand

studio full access®
CABINET SERIES

CABINET SPECIFICATIONS 2019-2020

UPDATES TO SPECIFICATIONS BOOK ii
ENVIRONMENTAL STEWARDSHIP PROGRAM iii
THERMOFUSED LAMINATE (TFL) DOOR STYLES AND FINISH OFFERINGS 1.1-1.4
THERMOFOIL (RTF) DOOR STYLES AND FINISH OFFERINGS 1.5-1.8
PAINTED MDF DOOR STYLES AND FINISH OFFERINGS 1.9-1.10
FRAMELESS CONSTRUCTION SPECIFICATIONS 1.11
MODIFICATION CODE KEY 1.12
WALL CABINETS 2.1-2.18

Single Door Wall Cabinets 2.1-2.2
Two Door Wall Cabinets 2.3-2.5
Vertical Lift-Up Wall Cabinets . . . 2.6-2.7
Blind and Corner Wall Cabinets 2.8-2.11
Refrigerator Wall Cabinets 2.12-2.13
Microwave Wall Cabinets 2.14
Vetro Aluminum Doors 2.15
Wall Specialty Items 2.16-2.17
Blind Wall Cabinet Instructions 2.18

BASE CABINETS 3.1-3.11

Single Door Base Cabinets 3.1
Two Door Base Cabinets 3.2
Drawer Base Cabinets 3.3
Blind and Corner Base Cabinets 3.4
Specialty Base Cabinets 3.5
Sink Base Cabinets 3.6-3.9
Base Specialty Items 3.10
Blind Base Cabinet Instructions 3.11

TALL CABINETS 4.1-4.14

Wardrobe Cabinets 4.1-4.5
Utility Cabinets 4.6-4.9
Oven Cabinets 4.10-4.11
Loose Shelves 4.12
Tall Specialty Items 4.13
Oven Cut-Out Instructions 4.14

VANITY CABINETS 5.1-5.9

Single Door Vanity Sink Base Cabinets 5.1
Two Door Vanity Sink Base Cabinets 5.1
Vanity Drawer Sink Base Cabinets . . 5.2
Single Door Vanity Base Cabinets . . . 5.2
Vanity Drawer Base Cabinets 5.3
Vanity Combination Cabinets 5.4
Floating Vanity Base Cabinets 5.5
Floating Vanity Sink Base Cabinets . . 5.6
Vanity Wall Cabinet 5.7
Vanity Linen Cabinets 5.8
Floating Vanity Cabinet Installation Instructions 5.9

UNIVERSAL ACCESS CABINETS 6.1-6.8

UA Base Cabinets 6.1-6.2
UA Drawer Base Cabinets 6.3
UA Corner and Blind Base Cabinets 6.4-6.5
UA Specialty Base Cabinets 6.6
UA Sink Base Cabinets 6.7
UA Adaptable Sink Base Cabinets . . 6.8

MOLDINGS AND PANELS 7.1-7.6

Fillers 7.1
Panels 7.2-7.4
Valances 7.4
Moldings 7.5-7.6

TOUCH-UP MATERIALS AND PARTS 8.1-8.3
HARDWARE 8.4-8.5
INDEX 9.1-9.3
NOTES 9.4
APPENDICES 9.5-9.12

Caring For Your New SFA Cabinet Products 9.5
Limited 1-Year Warranty 9.6-9.7
Terms & Conditions For All Sales of Goods 9.8-9.9
Glossary of Nomenclature 9.10-9.11
Door and Drawer Size to Cabinet Reference Chart 9.12

NOTICE: The product specifications appearing herein supersede and cancel all previous sheets, supplements and addenda, and represent current manufacturing standards and procedures. Studio Full Access Cabinets reserves the right to make specification changes for continued product improvement.

FRONT COVER: Uptown™ shown in Moonlight finish.

UPDATES TO SPECIFICATIONS BOOK

	DESCRIPTION	PAGE NUMBER
NEW PRODUCTS	**WALL CABINETS**	
	39" High Single Door Wall Cabinets	2.1
	39" High Single Door Long Wall Cabinets	2.2
	39" High Two Door Wall Cabinets	2.3
	39" High Two Door Long Wall Cabinets	2.4
	39" High Single Door Blind Wall Cabinets	2.8
	39" High Single Door Blind Long Wall Cabinets	2.9
	39" High Easy Reach Wall Cabinets	2.10
	39" High Easy Reach Long Wall Cabinets	2.10
	39" High Single Door Corner Wall Cabinets	2.11
	39" High Single Door Corner Long Wall Cabinets	2.11
	39" High Two Door 12" Deep Microwave Wall Cabinets with Extended Bottom	2.14
	39" High Vetro Aluminum Doors	2.15
	39" High Bookcases	2.17
	BASE CABINETS	
	Added SKU to Two Door Full Height Sink Base Cabinet with Removable Front	3.7
	Two Door Sink Base Cabinet with Removable Front	3.8
	Base Cabinet Roll-Out Shelf Tray Kits	3.10
	TALL CABINETS	
	12" Wide x 12" or 24" Deep Single Door Wide Utility Cabinets	4.6
	93" High x 12" or 24" Deep Single Door Wide Utility Cabinets	4.6
	93" High x 12" or 24" Deep Two Door Wide Utility Cabinets	4.7
	12" Wide x 12" or 24" Deep Single Door Wide Inverted Utility Cabinets	4.8
	93" High x 12" or 24" Deep Single Door Wide Inverted Utility Cabinets	4.8
	93" High x 12" or 24" Deep Two Door Wide Inverted Utility Cabinets	4.9
	93" High x 24" Deep Two Door and Three Drawer Single Oven Cabinets	4.10
	93" High x 24" Deep Two Door and Single Drawer Double Oven Cabinets	4.10
	Utility Cabinet Shelves	4.12
	Utility Cabinet Roll-Out Shelf Trays Kits	4.13
	VANITY CABINETS	
	Vanity Drawer Sink Base Cabinets	5.2
	Floating Vanity Drawer Sink Base Cabinets	5.6
	Vanity Wall Cabinet	5.7
	84" High Single Door Wide Inverted Vanity Linen Cabinets	5.8
	UNIVERSAL ACCESS CABINETS	
	Universal Access Full Height Base Cabinet with Factory Installed Double Wastebaskets	6.6
MODIFICATIONS	DESCRIPTION	PAGE NUMBER
	BASE CABINETS	
	23" Altered Depth Option	3.1-3.4, 3.6, 3.9
	Roll-Out Shelf Tray Option	3.1
	Full-Depth Shelf Option	3.1-3.2, 3.4
	UNIVERSAL ACCESS CABINETS	
	23" Altered Depth Options	6.1-6.4, 6.7-6.8
	Full-Depth Shelf Options	6.1-6.2, 6.4
DISCONTINUATIONS	DESCRIPTION	PAGE NUMBER
	WALL CABINETS	
	12" or 24" Deep Single Door Vertical Lift-Up Wall Cabinets	2.6
	12" or 24" Deep Single Door Vertical Lift-Up Long Wall Cabinets	2.7

Sustainable. Durable. Affordable. Stylish.

OUR COMMITMENT TO OUR CABINET PRODUCTS & SUSTAINABILITY

Sustainability has emerged as an important component in our everyday lives, directly shaping our daily activities and the products we purchase. As a leading manufacturer of high-quality wood cabinets, Studio Full Access Cabinets recognizes the importance of protecting the environment and using resources responsibly.

All our products are **CARB ATCM 93120 Phase 2 and TSCA Title VI compliant**, and we are proud to carry the KCMA's ESP certification.

Introduced in 2006, KCMA developed the Environmental Stewardship Program (ESP) to encourage practices that benefit the environment and communities served by cabinet manufacturers. The ESP certification program holds the cabinetry industry to high standards for their products, forest sustainability and manufacturing processes.

Through the ESP we are systematically reducing our environmental footprint and providing environmentally conscious products to our customers as well.

BACK SIDE OF iii does not print

studio full access®

CABINET SERIES

Door Style And Construction Options

studio full access®

CABINET SERIES

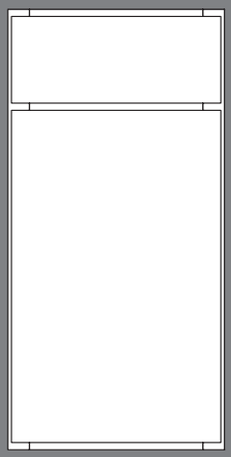

Door Style And Construction Options

THERMOFUSED LAMINATE (TFL) PROGRAM SUMMARY

Program Summaries: Thermofused Laminate (TFL)

Design Notes

- Grain will run the length of all moldings

THERMOFUSED LAMINATE (TFL) PROGRAM SUMMARY				
	SLAB DOOR STYLES			
	UPTOWN	MADISON		
Door Material	Textured Melamine*	Textured Melamine		
Door Back	Coordinated Melamine	Coordinated Melamine		
Standard Cabinet Interior	White Laminate	White Laminate		
Face Front Edgebanding	Coordinated PVC	Coordinated PVC		
End Panels	Coordinated Laminate	Coordinated Laminate		
Matching Interior (where applicable)	Coordinated Laminate	Coordinated Laminate		
Standard Drawer	Metal Drawer Box (white sides and components)	Metal Drawer Box (white sides and components)		

THERMOFUSED LAMINATE (TFL) DOOR STYLES

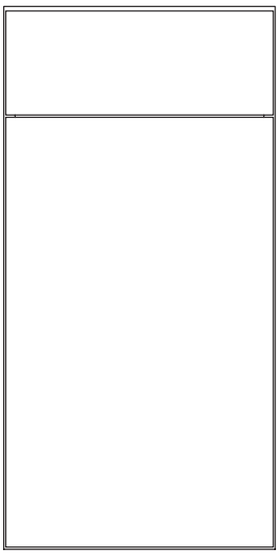

UPTOWN™ – 801UPT

- 5/8" thick melamine slab doors and drawer fronts
- Melamine laminate is thermally fused to front and back faces of TSCA Title VI compliant composite panel core
- Finish pattern runs vertically for both doors, drawer fronts, and end panels
- Edgebanded on all four sides
- Square design for all cabinets; offered with slab drawer fronts
- Decorative hardware is required

MADISON™ – 804MAD

- 5/8" thick melamine slab doors and drawer fronts
- Textured melamine laminate is thermally fused to front and back faces of TSCA Title VI compliant composite panel core
- Finish pattern runs vertically for both doors, drawer fronts, and end panels
- Edgebanded on all four sides
- Square design for all cabinets; offered with slab drawer fronts
- Decorative hardware is required

THERMOFUSED LAMINATE (TFL) PRICE GRADE AND FINISH AVAILABILITY

Program Summaries: Thermofused Laminate (TFL)

Design Notes

- Grain will run the length of all moldings

THERMOFUSED LAMINATE (TFL) PRICE GRADE & FINISH AVAILABILITY				
		SLAB DOOR STYLES		
FINISH COLORS	UPTOWN	MADISON		
Ash	N/A	1		
Brownstone	1	N/A		
Graphite	N/A	1		
Moonlight VT	1	N/A		
Winter Bark HZ	1	N/A		

Program Summaries: Thermofoil (RTF)

THERMOFOIL (RTF) PROGRAM SUMMARY		
	SLAB DOOR STYLES	SHAKER DOOR STYLES
	AVALON	GALLERY
Door Back	White Melamine	White Melamine
Standard Cabinet Interior	White Laminate	White Laminate
End Panels	Coordinated Laminate	Coordinated Laminate
Matching Interior (where applicable)	Coordinated Laminate	Coordinated Laminate
Standard Drawer	5/8" (16mm) Thick Solid Beech Hardwood Dovetail Drawer Box	5/8" (16mm) Thick Solid Beech Hardwood Dovetail Drawer Box

THERMOFOIL (RTF) DOOR STYLES

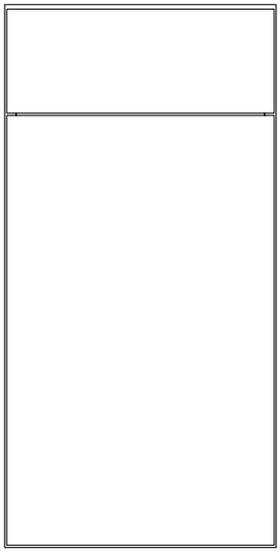

AVALON™ – 820AVA

- 3/4" thick RTF slab doors and drawer fronts
- Rigid thermofoil laminate fused to TSCA Title VI compliant MDF core
- Backside of doors and drawer fronts are white melamine, regardless of finish ordered
- Square design for all cabinets; offered with slab drawer fronts
- Decorative hardware is required

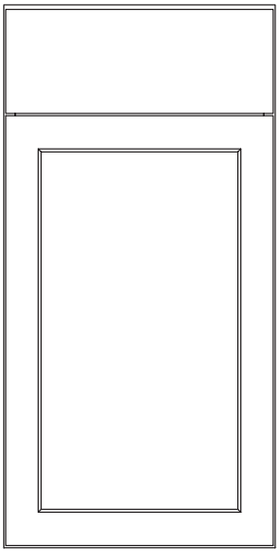

GALLERY™ – 822GAL

- 3/4" thick RTF shaker doors and slab drawer fronts
- Rigid thermofoil laminate fused to TSCA Title VI compliant MDF core
- Backside of doors and drawer fronts are white melamine, regardless of finish ordered
- Square design for all cabinets; offered with slab drawer fronts
- Decorative hardware is required

THERMOFOIL (RTF) PRICE GRADE AND FINISH AVAILABILITY

Program Summaries: Thermofoil (RTF)

THERMOFOIL (RTF) PRICE GRADE & FINISH AVAILABILITY		
	SLAB DOOR STYLES	SHAKER DOOR STYLES
FINISH COLORS	AVALON	GALLERY
Exotic White	1	1
Fashion Grey	N/A	1

PAINTED MDF PROGRAM SUMMARY

Program Summaries: Painted MDF

Design Notes

- 3/4" thick painted MDF doors and drawer fronts

PAINTED MDF PROGRAM SUMMARY		
	SHAKER DOOR STYLE	
	GEORGETOWN	
Door Back	Painted One Piece MDF	
Standard Cabinet Interior	White Laminate	
End Panels	Coordinated Laminate	
Matching Interior (where applicable)	Coordinated Laminate	
Standard Drawer	5/8" (16mm) Thick Solid Beech Hardwood Dovetail Drawer Box	

PAINTED MDF DOOR STYLES

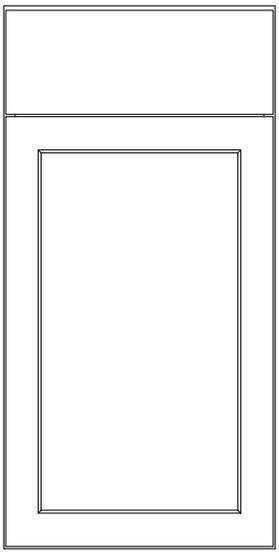

GEORGETOWN™ – 850GEO

- 3/4" thick painted MDF shaker doors with slab drawer fronts
- Available in six enamel paint finishes; doors are painted front and back
- Square design for all cabinets; offered with slab drawer fronts
- Decorative hardware is required

PAINTED MDF PRICE GRADE AND FINISH AVAILABILITY

Program Summaries: Painted MDF

Design Notes

- 3/4" thick painted MDF doors and drawer fronts

PAINTED MDF PRICE GRADE & FINISH AVAILABILITY		
	SHAKER DOOR STYLES	
ENAMEL PAINT COLORS	GEORGETOWN	
Slate	2	

ADVANTAGES OF PAINTED MDF FINISH OFFERINGS

- No noticeable grain resulting in a smooth finish
- One piece construction eliminates joint lines and center panel movement

FRAMELESS CONSTRUCTION SPECIFICATIONS

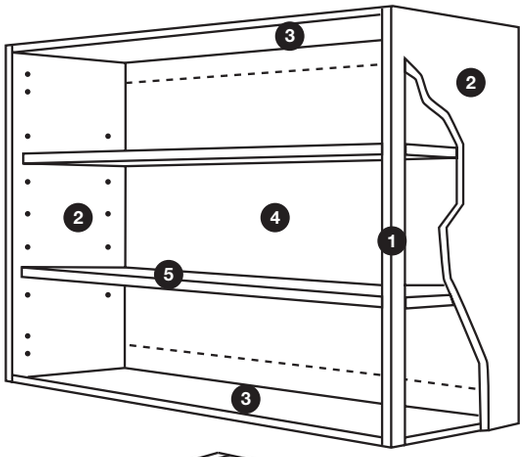

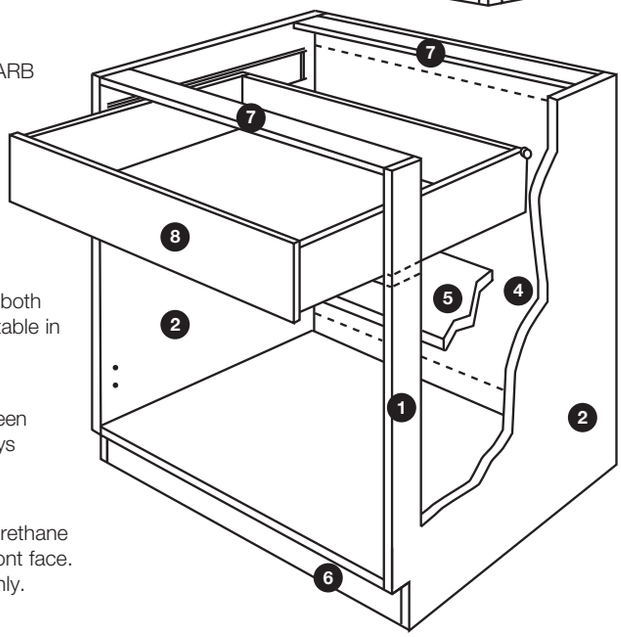

1 BOX CONSTRUCTION
5/8" industrial grade particleboard conforming to ANSI 208.1 and CARB Phase 2, faced with both thermally fused melamine & polyurethane coated overlays (for doors & drawer fronts, and for end panels respectively). Front face of cabinet edgebanded with1mm PVC in door matching colors. Nailers, Stretchers, and Toe Kicks have a 3-dowel application, increasing the lateral strength of the overall cabinet.

2 END PANELS
5/8" industrial grade particleboard conforming to ANSI 208.1 and CARB Phase 2, faced with polyurethane-coated material, matching the color of doors and drawer fronts. End Panels are bore and dowel with glue joinery. Exterior matches door and drawer front color. Interior finish is white. End panels are not textured.

3 TOP/BOTTOM PANELS
5/8" industrial grade particleboard conforming to ANSI 208.1 and CARB Phase 2. Exposed exterior panels faced with polyurethane-coated material, matching the color of doors and drawer fronts.

4 BACK PANEL
1/8" fully captured back panel in dado glued and stapled to maintain squareness and structural rigidity. Interior surface faced with thermoplastic polymer top coat.

5 SHELVES
3/4" thick particleboard with polyurethane-coated white laminate on both sides including matching edgeband for front face. Shelves are adjustable in all wall and base cabinets.

6 TOE KICK
5/8" thick x 4-1/2" high industrial grade particleboard captured between end panels. Toe kick is recessed 3-15/16". Decorative toe kick overlays use 1/8" thick polyurethane-coated material, ordered separately.

7 CROSS SUPPORT STRETCHERS
5/8" thick X 4-1/2" deep running the width of the cabinet, with polyurethane -coated white laminate on both sides and matching edgeband for front face. Additional stretcher positioned beneath drawers for base cabinets only.

8 DRAWERS
Dovetail Drawer: Front, back and sides are 5/8" (16mm) thick solid beech hardwood with dovetail construction. Drawer bottoms are nominal 1/4" (6mm) thick multi-ply hardwood birch plywood inserted into dado in front, back, and sides. Includes high-quality steel, undermount soft-close drawer guides that help reduce drawer slamming. Drawers are full extension, self adjusting in mounting brackets. Built-in stop, self-closing and stay closed features with a 100 lb. rated load capacity.

HINGES
Standard: German engineered, made in the USA. Soft-close that is fully integrated & concealed in the hinge arm. This feature is activated until the door is completely shut. Fully Concealed, 110 degree, 6-way adjustable clip-on with a stamped steel cup and hinge body.

Door Reveals: Top and bottom, 1/8"; sides, 1/16"

WOOD DOVETAIL DRAWERS

SOFT CLOSE HINGES

NOTICE:
The product specifications appearing herein supersede and cancel all previous sheets, supplements and addenda, and represent current manufacturing standards and procedures. Smart Cabinetry reserves the right to make specification changes for continued product improvement.

MODIFICATION CODE KEY

AD ALTERED DEPTH

- Most **Wall Cabinets** can be increased to 15" or 18" deep
- Select 24" deep **Base Cabinets** can be decreased to 23", 21" or 18" deep
- Most 21" deep **Vanity Cabinets** can be decreased to 18" deep
- Select 24" deep **Universal Access Cabinets** can be decreased to 23", 21" or 18" deep

2020 ORDER EXAMPLE:
EW3030 choose “Attributes” then select “add-ons” and “Altered Depth” option

MI MATCHING INTERIOR

- Select **Wall Cabinets** and **Panels** available with matching interior option
- **Matching Interior option comes standard on all open cabinets**
- When matching interior option is selected, cabinet interior will come with coordinated laminate to match cabinet exterior

2020 ORDER EXAMPLE:
EW3030 choose “Attributes” then select “add-ons” and “Matching Interior” option

FDS FULL-DEPTH SHELF

- Select **Base Cabinets** can be ordered with full-depth shelves
- Select **Universal Access Cabinets** can be ordered with full-depth shelves
- **Full-depth shelves must be ordered with the cabinet.** Cabinets ordered with standard half-depth shelves are not compatible with after-market installation of full-depth shelves.

2020 ORDER EXAMPLE:
EB12L choose “Attributes” then select “Add-Ons” and “Full Depth Shelf” option

ST ROLL-OUT SHELF TRAY

- Select **Base Cabinets** can be ordered with a roll-out shelf tray
- **Roll-out shelf trays are white, regardless of drawer construction ordered**
- Roll-out shelf tray replaces shelf
- **Cabinets ordered with standard half-depth shelves are not compatible with after-market installation of roll-out shelf trays;** limited cabinet SKUs ordered with full-depth shelves are compatible with after-market installation of roll-out shelf trays

2020 ORDER EXAMPLE:
EB12L choose “Attributes” then select “Add-Ons” and “Base Roll Out Tray” option

studio full access®

CABINET SERIES

Wall Cabinets

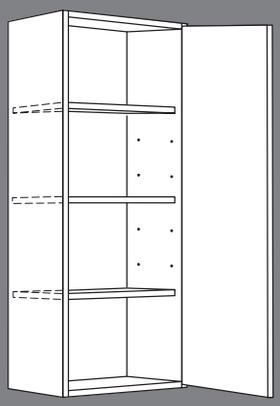

studio full access®

CABINET SERIES

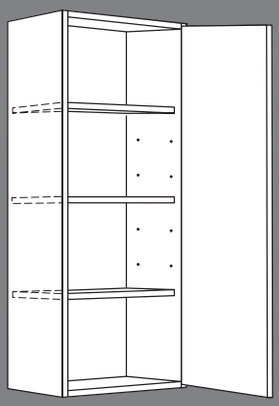

Wall Cabinets

SINGLE DOOR WALL CABINETS

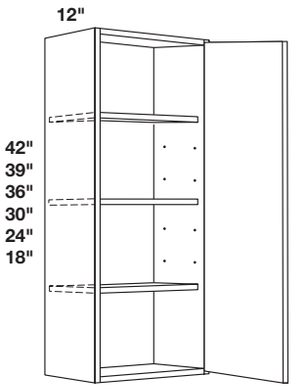

42" high shown

42", 39", 36", 30", 24", and 18" HIGH SINGLE DOOR WALL CABINETS

- 42" and 39" high cabinets have three adjustable shelves
  36" and 30" high cabinets have two adjustable shelves
  24" and 18" high cabinets have one adjustable shelf
- 42" and 39" high cabinets have three hinges per door
  36", 30", 24", and 18" high cabinets have two hinges per door

42" HIGH

EW0942 L or R	AD	MI
EW1242 L or R	AD	MI
EW1542 L or R	AD	MI
EW1842 L or R	AD	MI
EW2142 L or R	AD	MI
EW2442 L or R	AD	MI

30" HIGH

EW0930 L or R	AD	MI
EW1230 L or R	AD	MI
EW1530 L or R	AD	MI
EW1830 L or R	AD	MI
EW2130 L or R	AD	MI
EW2430 L or R	AD	MI

NEW

39" HIGH

EW0939 L or R	AD	MI
EW1239 L or R	AD	MI
EW1539 L or R	AD	MI
EW1839 L or R	AD	MI
EW2139 L or R	AD	MI
EW2439 L or R	AD	MI

24" HIGH

EW0924 L or R	AD	MI
EW1224 L or R	AD	MI
EW1524 L or R	AD	MI
EW1824 L or R	AD	MI
EW2124 L or R	AD	MI
EW2424 L or R	AD	MI

36" HIGH

EW0936 L or R	AD	MI
EW1236 L or R	AD	MI
EW1536 L or R	AD	MI
EW1836 L or R	AD	MI
EW2136 L or R	AD	MI
EW2436 L or R	AD	MI

18" HIGH

EW1818 L or R	AD	MI
EW2118 L or R	AD	MI
EW2418 L or R	AD	MI

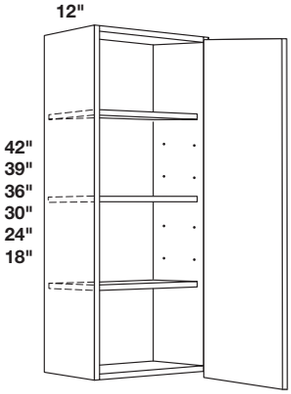

42" high shown

42", 39", 36", 30", 24", and 18" HIGH SINGLE DOOR LONG WALL CABINETS

- 42" and 39" high cabinets have three adjustable shelves
  36" and 30" high cabinets have two adjustable shelves
  24" and 18" high cabinets have one adjustable shelf
- 42" and 39" high cabinets have three hinges per door
  36", 30", 24", and 18" high cabinets have two hinges per door
- Long wall cabinet doors are 1" longer than standard doors, extending 7/8" below bottom of cabinets; designed to be used as finger pulls in place of decorative hardware

42" HIGH

EWL0942 L or R AD MI
EWL1242 L or R AD MI
EWL1542 L or R AD MI
EWL1842 L or R AD MI
EWL2142 L or R AD MI
EWL2442 L or R AD MI

30" HIGH

EWL0930 L or R AD MI
EWL1230 L or R AD MI
EWL1530 L or R AD MI
EWL1830 L or R AD MI
EWL2130 L or R AD MI
EWL2430 L or R AD MI

NEW

39" HIGH

EWL0939 L or R AD MI
EWL1239 L or R AD MI
EWL1539 L or R AD MI
EWL1839 L or R AD MI
EWL2139 L or R AD MI
EWL2439 L or R AD MI

24" HIGH

EWL0924 L or R AD MI
EWL1224 L or R AD MI
EWL1524 L or R AD MI
EWL1824 L or R AD MI
EWL2124 L or R AD MI
EWL2424 L or R AD MI

36" HIGH

EWL0936 L or R AD MI
EWL1236 L or R AD MI
EWL1536 L or R AD MI
EWL1836 L or R AD MI
EWL2136 L or R AD MI
EWL2436 L or R AD MI

18" HIGH

EWL1818 L or R AD MI
EWL2118 L or R AD MI
EWL2418 L or R AD MI

TWO DOOR WALL CABINETS

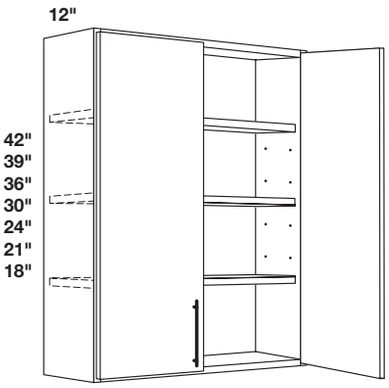

42" high shown

42", 39", 36", 30", 24", 21" and 18" HIGH TWO DOOR WALL CABINETS

- 42" and 39" high cabinets have three adjustable shelves
  36" and 30" high cabinets have two adjustable shelves
  24", 21", and 18" high cabinets have one adjustable shelf
- 42" and 39" high cabinets have three hinges per door
  36", 30", 24", 21", and 18" high cabinets have two hinges per door

42" HIGH

EW2442	AD	MI
EW2742	AD	MI
EW3042	AD	MI
EW3342	AD	MI
EW3642	AD	MI
EW3942	AD	MI

39" HIGH (NEW)

EW2439	AD	MI
EW2739	AD	MI
EW3039	AD	MI
EW3339	AD	MI
EW3639	AD	MI
EW3939	AD	MI

36" HIGH

EW2436	AD	MI
EW2736	AD	MI
EW3036	AD	MI
EW3336	AD	MI
EW3636	AD	MI
EW3936	AD	MI

30" HIGH

EW2430	AD	MI
EW2730	AD	MI
EW3030	AD	MI
EW3330	AD	MI
EW3630	AD	MI
EW3930	AD	MI

24" HIGH

EW2424	AD	MI
EW2724	AD	MI
EW3024	AD	MI
EW3324	AD	MI
EW3624	AD	MI
EW3924	AD	MI

21" HIGH

EW2421	AD	MI
EW2721	AD	MI
EW3021	AD	MI
EW3321	AD	MI
EW3621	AD	MI
EW3921	AD	MI

18" HIGH

EW2418	AD	MI
EW2718	AD	MI
EW3018	AD	MI
EW3318	AD	MI
EW3618	AD	MI
EW3918	AD	MI

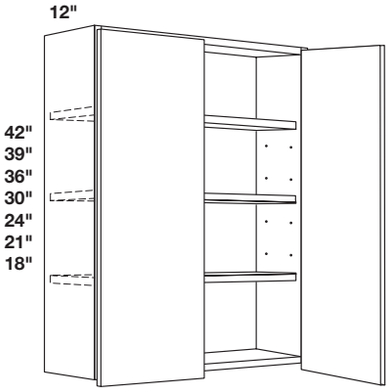

42" high shown

42", 39", 36", 30", 24", 21" and 18" HIGH TWO DOOR LONG WALL CABINETS

- 42" and 39" high cabinets have three adjustable shelves
  36" and 30" high cabinets have two adjustable shelves
  24", 21", and 18" high cabinets have one adjustable shelf
- 42" and 39" high cabinets have three hinges per door
  36", 30", 24", 21", and 18" high cabinets have two hinges per door
- Long wall cabinet doors are 1" longer than standard doors, extending 7/8" below bottom of cabinet; designed to be used as finger pulls in place of decorative hardware

42" HIGH

EWL2442	AD	MI
EWL2742	AD	MI
EWL3042	AD	MI
EWL3342	AD	MI
EWL3642	AD	MI
EWL3942	AD	MI

24" HIGH

EWL2424	AD	MI
EWL2724	AD	MI
EWL3024	AD	MI
EWL3324	AD	MI
EWL3624	AD	MI
EWL3924	AD	MI

NEW

39" HIGH

EWL2439	AD	MI
EWL2739	AD	MI
EWL3039	AD	MI
EWL3339	AD	MI
EWL3639	AD	MI
EWL3939	AD	MI

21" HIGH

EWL2421	AD	MI
EWL2721	AD	MI
EWL3021	AD	MI
EWL3321	AD	MI
EWL3621	AD	MI
EWL3921	AD	MI

36" HIGH

EWL2436	AD	MI
EWL2736	AD	MI
EWL3036	AD	MI
EWL3336	AD	MI
EWL3636	AD	MI
EWL3936	AD	MI

18" HIGH

EWL2418	AD	MI
EWL2718	AD	MI
EWL3018	AD	MI
EWL3318	AD	MI
EWL3618	AD	MI
EWL3918	AD	MI

30" HIGH

EWL2430	AD	MI
EWL2730	AD	MI
EWL3030	AD	MI
EWL3330	AD	MI
EWL3630	AD	MI
EWL3930	AD	MI

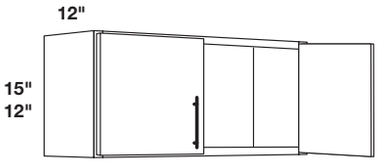

15" high shown

15" and 12" HIGH TWO DOOR WALL CABINETS

- 15" and 12" high cabinets do not come with shelves
- 15" and 12" high cabinets have two hinges per door

15" HIGH

EW2415	AD	MI
EW2715	AD	MI
EW3015	AD	MI
EW3315	AD	MI
EW3615	AD	MI
EW3915	AD	MI

12" HIGH

EW2412	AD	MI
EW2712	AD	MI
EW3012	AD	MI
EW3312	AD	MI
EW3612	AD	MI
EW3912	AD	MI

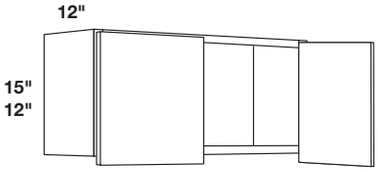

15" high shown

15" and 12" HIGH TWO DOOR LONG WALL CABINETS

- 15" and 12" high cabinets do not come with shelves
- 15" and 12" high cabinets have two hinges per door
- Long wall cabinet doors are 1" longer than standard doors, extending 7/8" below bottom of cabinet; designed to be used as finger pulls in place of decorative hardware

15" HIGH

EWL2415	AD	MI
EWL2715	AD	MI
EWL3015	AD	MI
EWL3315	AD	MI
EWL3615	AD	MI
EWL3915	AD	MI

12" HIGH

EWL2412	AD	MI
EWL2712	AD	MI
EWL3012	AD	MI
EWL3312	AD	MI
EWL3612	AD	MI
EWL3912	AD	MI

VERTICAL LIFT-UP WALL CABINETS

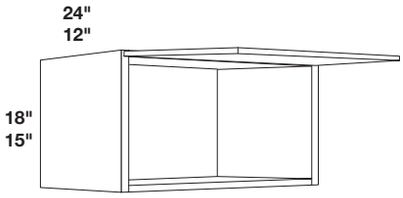

EWVL3618x24 shown

12" or 24" DEEP SINGLE DOOR VERTICAL LIFT-UP WALL CABINETS

- Cabinets have two lift-up hinges per door with maximum 110° opening angle
- Vertical lift-up wall cabinets are not available with shelves

12" DEEP CABINETS

18" HIGH

EWVL2418	AD	MI
EWVL3018	AD	MI
EWVL3318	AD	MI
EWVL3618	AD	MI

15" HIGH

EWVL2415	AD	MI
EWVL3015	AD	MI
EWVL3315	AD	MI
EWVL3615	AD	MI

24" DEEP CABINETS

18" HIGH

EWVL2418x24	MI
EWVL3018x24	MI
EWVL3318x24	MI
EWVL3618x24	MI

15" HIGH

EWVL2415x24	MI
EWVL3015x24	MI
EWVL3315x24	MI
EWVL3615x24	MI

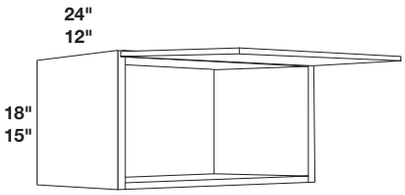

EWVL3618x24 shown

12" or 24" DEEP SINGLE DOOR VERTICAL LIFT-UP LONG WALL CABINETS

- Cabinets have two lift-up hinges per door with maximum 110° opening angle
- Vertical lift-up wall cabinets are not available with shelves
- Long wall cabinet doors are 1" longer than standard doors, extending 7/8" below bottom of cabinet; designed to be used as finger pulls in place of decorative hardware

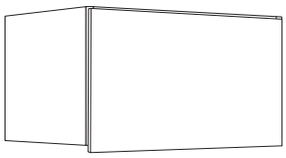

shown closed

12" DEEP CABINETS

18" HIGH

EWLVL2418	AD	MI
EWLVL3018	AD	MI
EWLVL3318	AD	MI
EWLVL3618	AD	MI

15" HIGH

EWLVL2415	AD	MI
EWLVL3015	AD	MI
EWLVL3315	AD	MI
EWLVL3615	AD	MI

24" DEEP CABINETS

18" HIGH

EWLVL2418x24	MI
EWLVL3018x24	MI
EWLVL3318x24	MI
EWLVL3618x24	MI

15" HIGH

EWLVL2415x24	MI
EWLVL3015x24	MI
EWLVL3315x24	MI
EWLVL3615x24	MI

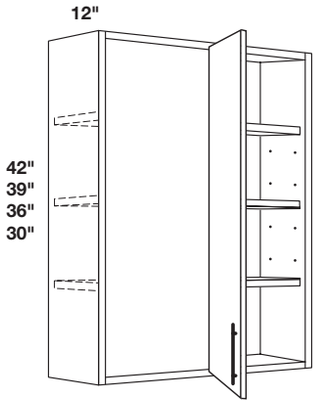

42" high L shown

SINGLE DOOR BLIND WALL CABINETS

- 42" and 39" high cabinets have three adjustable shelves
  36" and 30" high cabinets have two adjustable shelves
- 42" and 39" high cabinets have three hinges per door
  36" and 30" high cabinets have two hinges per door
- Specify L or R blind panel location
- See page 2.18 for blind cabinet installation instructions
- Filler must be used. Filler sold separately, see page 7.1.
- Allow 15" to turn corner. Cabinets may be pulled up to 4"

42" HIGH

EBLW24/2742 L or R	AD	MI
EBLW27/3042 L or R	AD	MI
EBLW30/3342 L or R	AD	MI
EBLW33/3642 L or R	AD	MI
EBLW36/3942 L or R	AD	MI
EBLW39/4242 L or R	AD	MI

NEW

39" HIGH

EBLW24/2739 L or R	AD	MI
EBLW27/3039 L or R	AD	MI
EBLW30/3339 L or R	AD	MI
EBLW33/3639 L or R	AD	MI
EBLW36/3939 L or R	AD	MI
EBLW39/4239 L or R	AD	MI

36" HIGH

EBLW24/2736 L or R	AD	MI
EBLW27/3036 L or R	AD	MI
EBLW30/3336 L or R	AD	MI
EBLW33/3636 L or R	AD	MI
EBLW36/3936 L or R	AD	MI
EBLW39/4236 L or R	AD	MI

30" HIGH

EBLW24/2730 L or R	AD	MI
EBLW27/3030 L or R	AD	MI
EBLW30/3330 L or R	AD	MI
EBLW33/3630 L or R	AD	MI
EBLW36/3930 L or R	AD	MI
EBLW39/4230 L or R	AD	MI

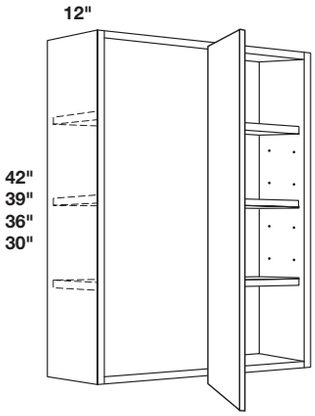

42" high L shown

SINGLE DOOR BLIND LONG WALL CABINETS

- 42" and 39" high cabinets have three adjustable shelves
  36" and 30" high cabinets have two adjustable shelves
- 42" and 39" high cabinets have three hinges per door
  36" and 30" high cabinets have two hinges per door
- Specify L or R blind panel location
- Long wall cabinet doors are 1" longer than standard doors, extending 7/8" below bottom of cabinet; designed to be used as finger pulls in place of decorative hardware
- See page 2.18 for blind cabinet installation instructions
- Filler must be used. Filler sold separately, see page 7.1.
- Allow 15" to turn corner. Cabinets may be pulled up to 4"

42" HIGH

EBLWL24/2742 L or R	AD	MI
EBLWL27/3042 L or R	AD	MI
EBLWL30/3342 L or R	AD	MI
EBLWL33/3642 L or R	AD	MI
EBLWL36/3942 L or R	AD	MI
EBLWL39/4242 L or R	AD	MI

NEW

39" HIGH

EBLWL24/2739 L or R	AD	MI
EBLWL27/3039 L or R	AD	MI
EBLWL30/3339 L or R	AD	MI
EBLWL33/3639 L or R	AD	MI
EBLWL36/3939 L or R	AD	MI
EBLWL39/4239 L or R	AD	MI

36" HIGH

EBLWL24/2736 L or R	AD	MI
EBLWL27/3036 L or R	AD	MI
EBLWL30/3336 L or R	AD	MI
EBLWL33/3636 L or R	AD	MI
EBLWL36/3936 L or R	AD	MI
EBLWL39/4236 L or R	AD	MI

30" HIGH

EBLWL24/2730 L or R	AD	MI
EBLWL27/3030 L or R	AD	MI
EBLWL30/3330 L or R	AD	MI
EBLWL33/3630 L or R	AD	MI
EBLWL36/3930 L or R	AD	MI
EBLWL39/4230 L or R	AD	MI

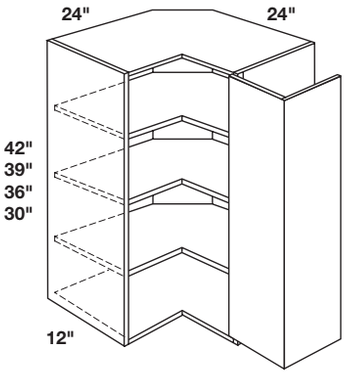

42" high R shown

EASY REACH WALL CABINETS

- 42" and 39" high cabinets have three adjustable shelves
  36" and 30" high cabinets have two adjustable shelves
- 42" and 39" high cabinets have three hinges per door
  36" and 30" high cabinets have two hinges per door
- **Gentle-Touch (soft-close) hinge not available**

42" HIGH
EWER2442 L or R MI

NEW **39" HIGH**
EWER2439 L or R MI

36" HIGH
EWER2436 L or R MI

30" HIGH
EWER2430 L or R MI

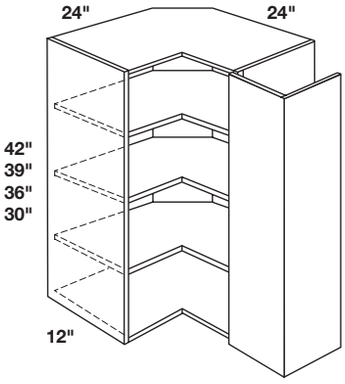

42" high R shown

EASY REACH LONG WALL CABINETS

- 42" and 39" high cabinets have three adjustable shelves
  36" and 30" high cabinets have two adjustable shelves
- 42" and 39" high cabinets have three hinges per door
  36" and 30" high cabinets have two hinges per door
- Long wall cabinet doors are 1" longer than standard doors, extending 7/8" below bottom of cabinet; designed to be used as finger pulls in place of decorative hardware
- **Gentle-Touch (soft-close) hinge not available**

42" HIGH
EWERL2442 L or R MI

NEW **39" HIGH**
EWERL2439 L or R MI

36" HIGH
EWERL2436 L or R MI

30" HIGH
EWERL2430 L or R MI

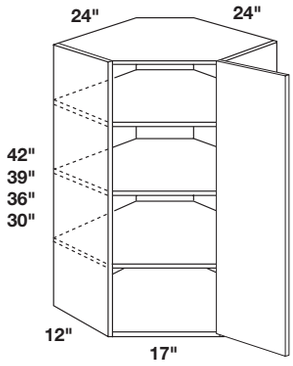

ECW2442 R shown

SINGLE DOOR CORNER WALL CABINETS

- 42" and 39" high cabinets have three adjustable shelves
  36" and 30" high cabinets have two adjustable shelves
- 42" and 39" high cabinets have three hinges per door
  36" and 30" high cabinets have two hinges per door
- **Corner wall cabinets not designed to be used with fillers or at the end of cabinet runs**

42" HIGH
ECW2442 L or R MI

NEW **39" HIGH**
ECW2439 L or R MI

36" HIGH
ECW2436 L or R MI

30" HIGH
ECW2430 L or R MI

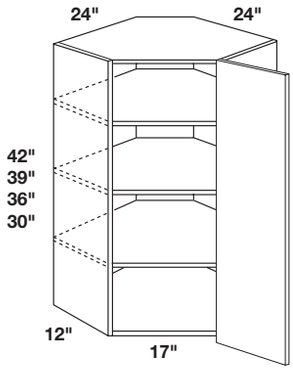

ECW2442 R shown

SINGLE DOOR CORNER LONG WALL CABINETS

- 42" and 39" high cabinets have three adjustable shelves
  36" and 30" high cabinets have two adjustable shelves
- 42" and 39" high cabinets have three hinges per door
  36" and 30" high cabinets have two hinges per door
- Long wall cabinet doors are 1" longer than standard doors, extending 7/8" below bottom of cabinet; designed to be used as finger pulls in place of decorative hardware
- **Corner wall cabinets not designed to be used with fillers or at the end of cabinet runs**

42" HIGH
ECWL2442 L or R MI

NEW **39" HIGH**
ECWL2439 L or R MI

36" HIGH
ECWL2436 L or R MI

30" HIGH
ECWL2430 L or R MI

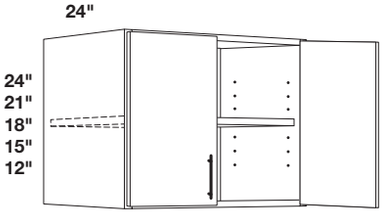

24" high shown

TWO DOOR 24" DEEP REFRIGERATOR WALL CABINETS

- 24", 21", and 18" high cabinets have one adjustable shelf
  15" and 12" high cabinets do not come with shelves
- 24", 21", 18", 15", and 12" high cabinets have two hinges per door
- **Must be installed between walls and/or tall cabinetry of equal or greater depth for support**

24" HIGH

EW3024x24 MI
EW3324x24 MI
EW3624x24 MI
EW3924x24 MI

21" HIGH

EW3021x24 MI
EW3321x24 MI
EW3621x24 MI
EW3921x24 MI

18" HIGH

EW3018x24 MI
EW3318x24 MI
EW3618x24 MI
EW3918x24 MI

15" HIGH

EW3015x24 MI
EW3315x24 MI
EW3615x24 MI
EW3915x24 MI

12" HIGH

EW3012x24 MI
EW3312x24 MI
EW3612x24 MI
EW3912x24 MI

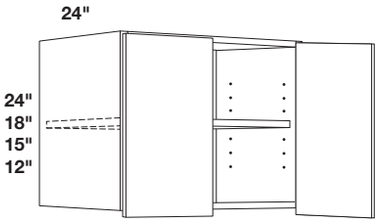

24" high shown

TWO DOOR 24" DEEP REFRIGERATOR LONG WALL CABINETS

- 24", 21", and 18" high cabinets have one adjustable shelf 15" and 12" high cabinets do not come with shelves
- 24", 21", 18", 15", and 12" high cabinets have two hinges per door
- Long wall cabinet doors are 1" longer than standard doors, extending 7/8" below bottom of cabinet; designed to be used as finger pulls in place of decorative hardware
- **Must be installed between walls and/or tall cabinetry of equal or greater depth for support**

24" HIGH

EWL3024x24 MI
EWL3324x24 MI
EWL3624x24 MI
EWL3924x24 MI

21" HIGH

EWL3021x24 MI
EWL3321x24 MI
EWL3621x24 MI
EWL3921x24 MI

18" HIGH

EWL3018x24 MI
EWL3318x24 MI
EWL3618x24 MI
EWL3918x24 MI

15" HIGH

EWL3015x24 MI
EWL3315x24 MI
EWL3615x24 MI
EWL3915x24 MI

12" HIGH

EWL3012x24 MI
EWL3312x24 MI
EWL3612x24 MI
EWL3912x24 MI

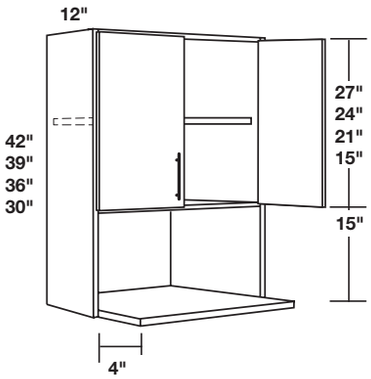

42" high shown

TWO DOOR 12" DEEP MICROWAVE WALL CABINETS WITH EXTENDED BOTTOM

- 42", 39", and 36" high microwave cabinets have one adjustable shelf 30" high microwave cabinets do not come with shelves
- 42", 39", 36" and 30" high microwave cabinets have two hinges per door
- Extended bottom is 16" deep x 5/8" thick
- **Entirety of cabinet comes with matching interior standard**

42" HIGH

EMC2442 AD
EMC2742 AD
EMC3042 AD

NEW

39" HIGH

EMC2439 AD
EMC2739 AD
EMC3039 AD

36" HIGH

EMC2436 AD
EMC2736 AD
EMC3036 AD

30" HIGH

EMC2430 AD
EMC2730 AD
EMC3030 AD

CABINET OPENING		
MODEL	WIDTH	HEIGHT
EMC2442	22-3/4"	14-1/2"
EMC2742	25-3/4"	14-1/2"
EMC3042	28-3/4"	14-1/2"
EMC2439	22-3/4"	14-1/2"
EMC2739	25-3/4"	14-1/2"
EMC3039	28-3/4"	14-1/2"
EMC2436	22-3/4"	14-1/2"
EMC2736	25-3/4"	14-1/2"
EMC3036	28-3/4"	14-1/2"
EMC2430	22-3/4"	14-1/2"
EMC2730	25-3/4"	14-1/2"
EMC3030	28-3/4"	14-1/2"

VETRO ALUMINUM DOORS

DOOR	DOOR SIZE	GLASS SIZE
EALDCG1524	14 7/8" x 23 3/4"	10 7/8" x 19 3/4"
EALDCG1824	17 7/8" x 23 3/4"	13 7/8" x 19 3/4"
EALDCG1530	14 7/8" x 29 3/4"	10 7/8" x 25 3/4"
EALDCG1830	17 7/8" x 29 3/4"	13 7/8" x 25 3/4"
EALDCG2130	20 7/8" x 29 3/4"	16 7/8" x 25 3/4"
EALDCGC2430	15 31/32" x 29 3/4"	12 3/16" x 25 3/4"
EALDCG1536	14 7/8" x 35 3/4"	10 7/8" x 31 3/4"
EALDCG1836	17 7/8" x 35 3/4"	13 7/8" x 31 3/4"
EALDCG2136	20 7/8" x 35 3/4"	16 7/8" x 31 3/4"
EALDCGC2436	15 31/32" x 35 3/4"	12 3/16" x 31 3/4"
EALDCG1539	**14 7/8" x 38 3/4"**	**10 7/8" x 34 3/4"**
EALDCG1839	**17 7/8" x 38 3/4"**	**13 7/8" x 34 3/4"**
EALDCG2139	**20 7/8" x 38 3/4"**	**16 7/8" x 34 3/4"**
EALDCGC2439	**15 31/32" x 38 3/4"**	**12 3/16" x 34 3/4"**
EALDCG1542	14 7/8" x 41 3/4"	10 7/8" x 37 3/4"
EALDCG1842	17 7/8" x 41 3/4"	13 7/8" x 37 3/4"
EALDCG2142	20 7/8" x 41 3/4"	16 7/8" x 37 3/4"
EALDCGC2442	15 31/32" x 41 3/4"	12 3/16" x 37 3/4"

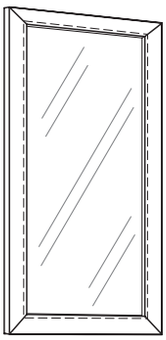

VETRO ALUMINUM DOORS

- Doors are bored for concealed hinges
- Use hinges and screws supplied with cabinet purchase
- Order bumper pads separately
- Aluminum doors available for field installation only
- **Aluminum doors come with rear mount frosted glass pre-installed; no other glass options are available**

42" HIGH

EALDCG1542	Fits EW1542, EW3042
EALDCG1842	Fits EW1842, EW3642
EALDCG2142	Fits EW2142, EW4242
EALDCGC2442	Fits ECW2442

NEW

39" HIGH

EALDCG1539	Fits EW1539, EW3039
EALDCG1839	Fits EW1839, EW3639
EALDCG2139	Fits EW2139
EALDCGC2439	Fits ECW2439

36" HIGH

EALDCG1536	Fits EW1536, EW3036
EALDCG1836	Fits EW1836, EW3636
EALDCG2136	Fits EW2136
EALDCGC2436	Fits ECW2436

30" HIGH

EALDCG1530	Fits EW1530, EW3030
EALDCG1830	Fits EW1830, EW3630
EALDCG2130	Fits EW2130
EALDCGC2430	Fits ECW2430

24" HIGH

EALDCG1524	Fits EW1524, EW3024
EALDCG1824	Fits EW1824, EW3624

WALL SPECIALTY ITEMS

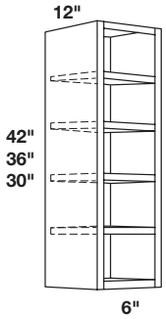

30" high shown

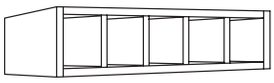

alternate installation

WINE CUBES

- Can be installed either horizontally or vertically
- **Matching interior standard**
- Shelves are not adjustable

EWC42 holds 7 bottles
EWC36 holds 6 bottles
EWC30 holds 5 bottles

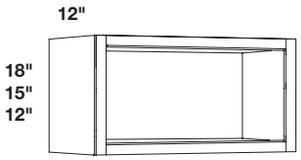

OPEN WALL CABINETS

- Cabinets do not come with doors or shelves
- Cabinets are not bored for shelves
- **Matching interior standard**

18" HIGH		15" HIGH		12" HIGH	
EWOC2418	AD	EWOC2415	AD	EWOC2412	AD
EWOC2718	AD	EWOC2715	AD	EWOC2712	AD
EWOC3018	AD	EWOC3015	AD	EWOC3012	AD
EWOC3318	AD	EWOC3315	AD	EWOC3312	AD
EWOC3618	AD	EWOC3615	AD	EWOC3612	AD

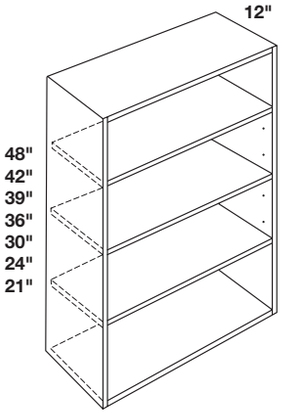

42" high shown

48", 42", 36", 30", 24", and 21" HIGH BOOKCASES

48", 42", and 39" high bookcases have three adjustable shelves
36" and 30" high bookcases have two adjustable shelves
24" and 21" high bookcases have one adjustable shelf
Matching interior standard

48" HIGH

EBC2448	AD
EBC2748	AD
EBC3048	AD
EBC3348	AD
EBC3648	AD

42" HIGH

EBC2442	AD
EBC2742	AD
EBC3042	AD
EBC3342	AD
EBC3642	AD

NEW 39" HIGH

EBC2439	AD
EBC2739	AD
EBC3039	AD
EBC3339	AD
EBC3639	AD

36" HIGH

EBC2436	AD
EBC2736	AD
EBC3036	AD
EBC3336	AD
EBC3636	AD

30" HIGH

EBC2430	AD
EBC2730	AD
EBC3030	AD
EBC3330	AD
EBC3630	AD

24" HIGH

EBC2424	AD
EBC2724	AD
EBC3024	AD
EBC3324	AD
EBC3624	AD

21" HIGH

EBC2421	AD
EBC2721	AD
EBC3021	AD
EBC3321	AD
EBC3621	AD

BLIND WALL CABINET INSTRUCTIONS

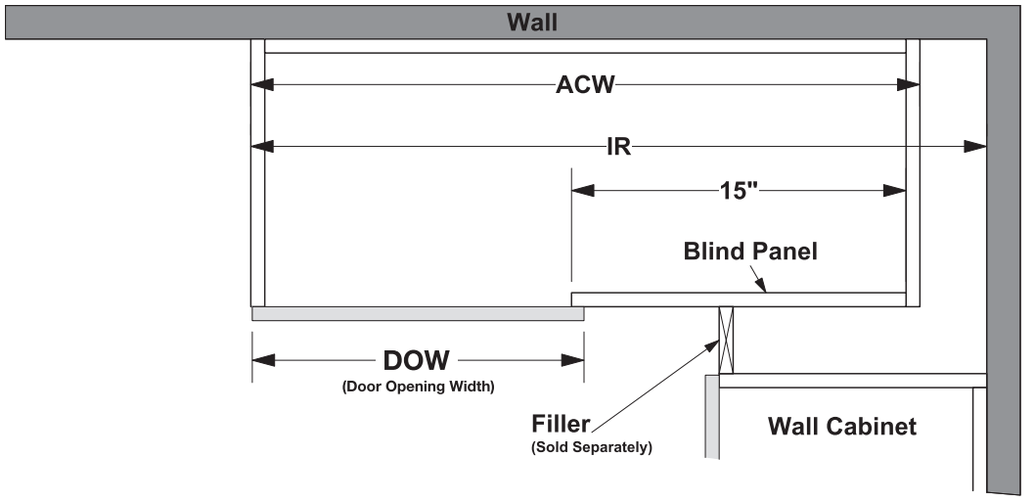

TOP VIEW, RIGHT HAND SHOWN

BLIND WALL CABINETS BY WIDTH

CABINET	ACW	IR	DOW
EBLW24/27_ _	24"	24" – 29"	8-7/8"
EBLW27/30_ _	27"	27" – 32"	11-7/8"
EBLW30/33_ _	30"	30" – 35"	14-7/8"
EBLW33/36_ _	33"	33" – 38"	17-7/8"
EBLW36/39_ _	36"	36" – 41"	20-7/8"
EBLW39/42_ _	39"	39" – 44"	23-7/8"

BLIND CABINETS LEGEND	
ACW	The actual cabinet width
IR	The recommended installation range from the adjacent wall
DOW	The door opening width dimension

studio full access®

CABINET SERIES

Base Cabinets

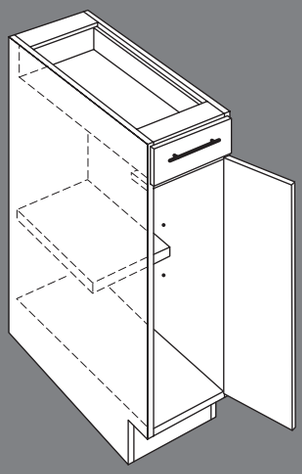

studio full access®

CABINET SERIES

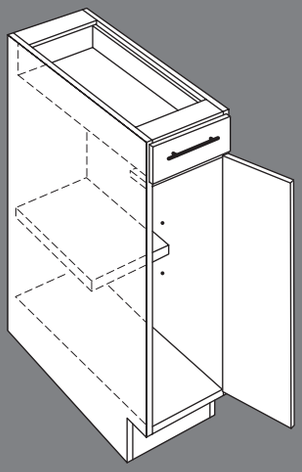

Base Cabinets

SINGLE DOOR BASE CABINETS

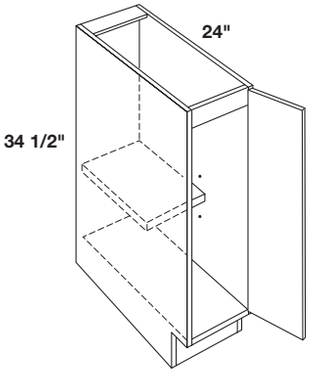

SINGLE DOOR FULL HEIGHT BASE CABINETS

- One half-depth adjustable shelf
- **EB09FH does not have a shelf**

EB09FH L or R	AD	
EB12FH L or R	AD	FDS
EB15FH L or R	AD	FDS
EB18FH L or R	AD	FDS
EB21FH L or R	AD	FDS
EB24FH L or R	AD	FDS

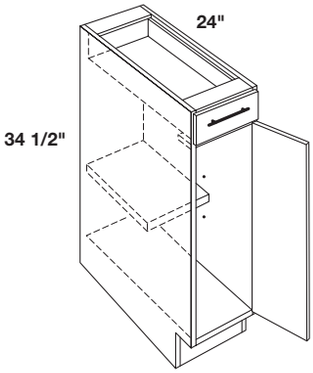

SINGLE DOOR AND DRAWER BASE CABINETS

- One half-depth adjustable shelf
- **EB09 does not have a shelf**
- **EB09 not available with double wall drawer upgrade**
- **EB09 not available with shelf tray option**

EB09 L or R	AD		
EB12 L or R	AD	FDS	ST
EB15 L or R	AD	FDS	ST
EB18 L or R	AD	FDS	ST
EB21 L or R	AD	FDS	ST
EB24 L or R	AD	FDS	ST

TWO DOOR BASE CABINETS

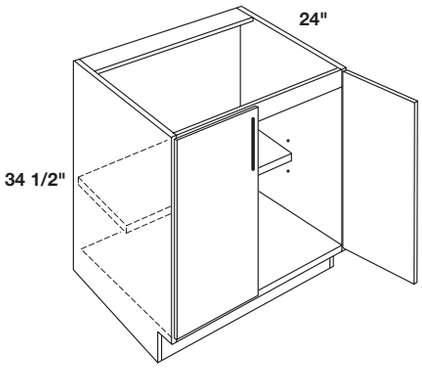

TWO DOOR FULL HEIGHT BASE CABINETS

- One half-depth adjustable shelf

EB24FH	AD	FDS
EB27FH	AD	FDS
EB30FH	AD	FDS
EB33FH	AD	FDS
EB36FH	AD	FDS
EB39FH	AD	FDS

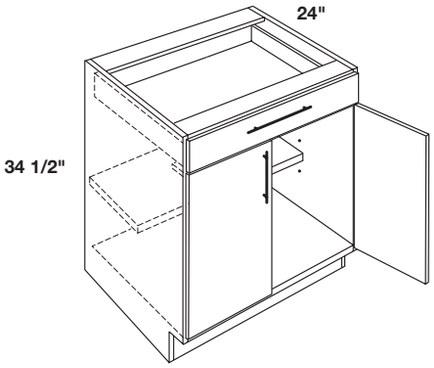

TWO DOOR AND DRAWER BASE CABINETS

- One half-depth adjustable shelf

EB24	AD	FDS
EB27	AD	FDS
EB30	AD	FDS
EB33	AD	FDS
EB36	AD	FDS
EB39	AD	FDS

DRAWER BASE CABINETS

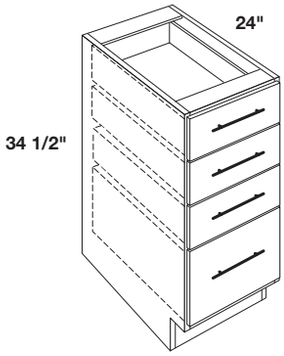

FOUR DRAWER BASE CABINETS

- Three standard-depth drawers on top and one deep drawer on bottom
- Does not accommodate metal drawer files
- **Not available in ADA 32.5" height**

EDB12-4	AD
EDB15-4	AD
EDB18-4	AD
EDB21-4	AD
EDB24-4	AD
EDB27-4	AD
EDB30-4	AD
EDB33-4	AD
EDB36-4	AD

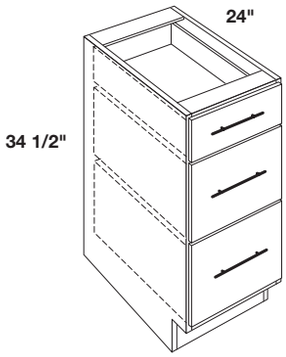

THREE DRAWER BASE CABINETS

- One standard-depth drawer on top and two deep drawers on bottom
- Does not accommodate metal drawer files

EDB12-3	AD
EDB15-3	AD
EDB18-3	AD
EDB21-3	AD
EDB24-3	AD
EDB27-3	AD
EDB30-3	AD
EDB33-3	AD
EDB36-3	AD

BLIND AND CORNER BASE CABINETS

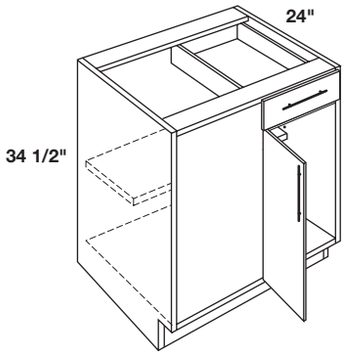

SINGLE DOOR AND DRAWER BLIND BASE CABINETS

- One half-depth adjustable shelf
- Specify L or R blind location
- See page 3.11 for blind cabinet installation instructions
- Filler must be ordered separately, see page 7.1. Allow 27" to turn corner
- **EBLB36/39 not available with double wall drawer upgrade**

EBLB36/39 L or R	AD	FDS
EBLB39/42 L or R	AD	FDS
EBLB42/45 L or R	AD	FDS
EBLB45/48 L or R	AD	FDS
EBLB48/51 L or R	AD	FDS

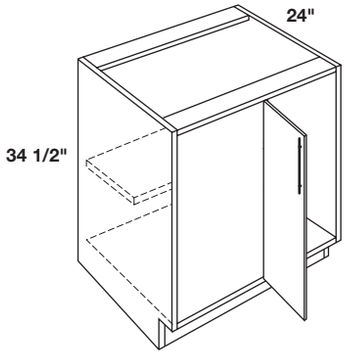

SINGLE DOOR FULL HEIGHT BLIND BASE CABINETS

- One half-depth adjustable shelf
- Specify L or R blind location
- See page 3.11 for blind cabinet installation instructions
- Filler must be ordered separately, see page 7.1. Allow 27" to turn corner

EBLB36/39FH L or R	AD	FDS
EBLB39/42FH L or R	AD	FDS
EBLB42/45FH L or R	AD	FDS
EBLB45/48FH L or R	AD	FDS
EBLB48/51FH L or R	AD	FDS

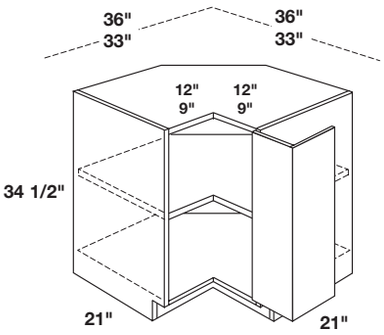

EASY REACH CORNER BASE CABINETS

- Cabinets come with one full-depth adjustable shelf
- Requires 36" of wall space on both sides; install 3" off the wall
- **Gentle-Touch (soft-close) hinge not available**

EBER33 L or R
EBER36 L or R

Recommend using fillers when installed near appliances that are greater than 25" in depth.

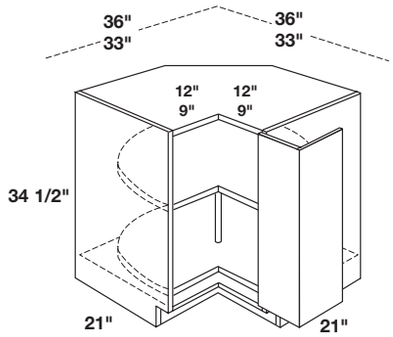

EASY REACH CORNER BASE CABINETS WITH LAZY SUSAN

- Two high impact 28" diameter white plastic shelves rotate independently
- Requires 36" of wall space on both sides; install 3" off the wall
- **Gentle-Touch (soft-close) hinge not available**

EBERS33 L or R
EBERS36 L or R

Recommend using fillers when installed near appliances that are greater than 25" in depth. This unit is NOT designed to be used at the end of a cabinet run.

SPECIALTY BASE CABINETS

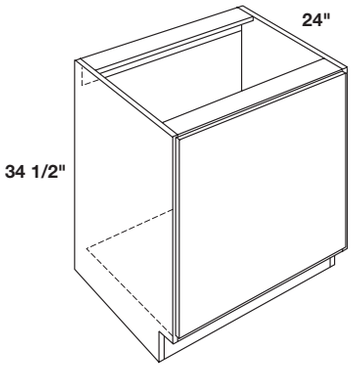

BASE OVEN CABINETS

- For under counter installation of single oven
- 5/8" thick industrial grade particleboard bottom
- Cabinets come with full coverage panel
- On-site trimming required based upon specs for oven; use trim kit supplied by appliance manufacturer
- **Base oven cabinets do not come with matching interior**

EBOC27
EBOC30

MAXIMUM CUT OUT DIMENSIONS

MODEL	WIDTH MAXIMUM	HEIGHT MAXIMUM
EBOC27	24.5"	28-3/4"
EBOC30	27.5"	28-3/4"

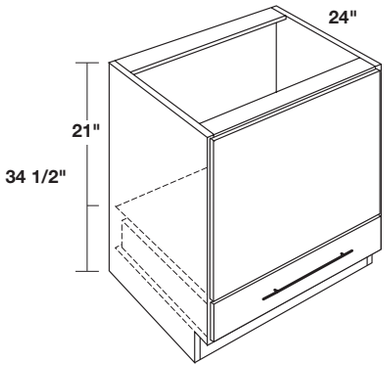

SINGLE DRAWER MICROWAVE BASE CABINETS

- For under counter installation of microwave
- 5/8" thick industrial grade particleboard bottom
- Cabinets come with full coverage panel
- Includes one standard drawer
- On-site trimming required based upon specs for microwave; use trim kit supplied by appliance manufacturer
- **Microwave base cabinets do not come with matching interior**

EBOD27
EBOD30

MAXIMUM CUT OUT DIMENSIONS

MODEL	WIDTH MAXIMUM	HEIGHT MAXIMUM
EBOD27	24.5"	21"
EBOD30	27.5"	21"

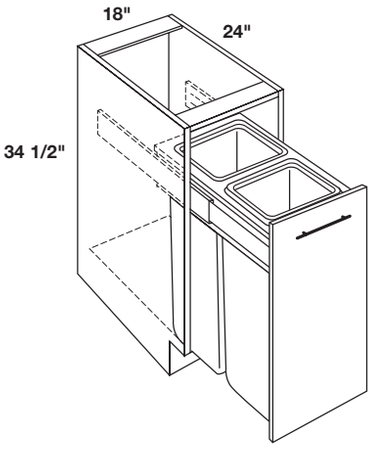

FULL HEIGHT BASE CABINET WITH FACTORY INSTALLED DOUBLE WASTEBASKETS

- Door is attached to wastebaskets and opens as drawer
- Two 50 qt. removable trash containers
- Full extension slides
- **Not available with soft-close slides**

EB18WBFH

SINK BASE CABINETS

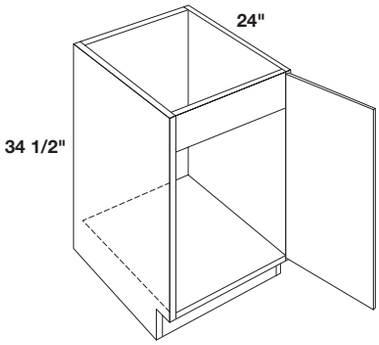

SINGLE DOOR FULL HEIGHT SINK BASE CABINETS

ESB18FH L or R AD
ESB21FH L or R AD
ESB24FH L or R AD

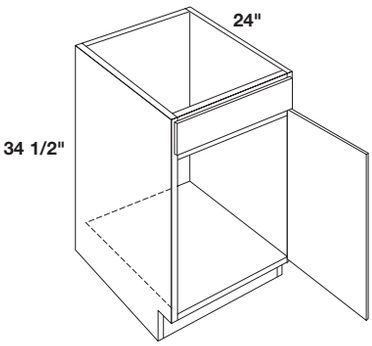

SINGLE DOOR SINK BASE CABINETS

- Dummy drawer front

ESB18 L or R AD
ESB21 L or R AD
ESB24 L or R AD

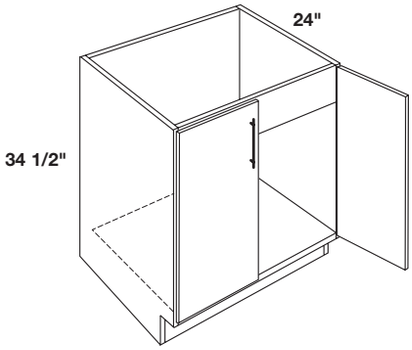

TWO DOOR FULL HEIGHT SINK BASE CABINETS

ESB24FH AD
ESB27FH AD
ESB30FH AD
ESB33FH AD
ESB36FH AD
ESB39FH AD
ESB42FH AD
ESB45FH AD
ESB48FH AD

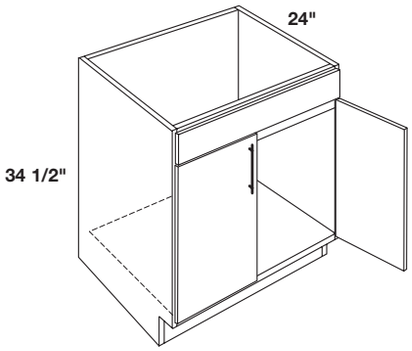

TWO DOOR SINK BASE CABINETS

- Dummy drawer front

ESB24 AD
ESB27 AD
ESB30 AD
ESB33 AD
ESB36 AD
ESB39 AD
ESB42 AD
ESB45 AD
ESB48 AD

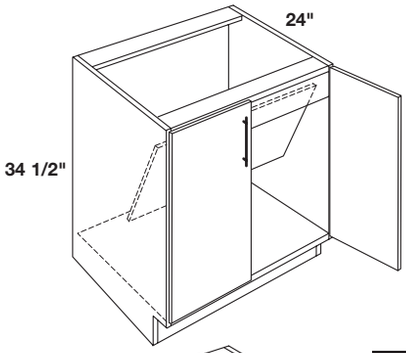

TWO DOOR FULL HEIGHT SINK BASE CABINET WITH REMOVABLE FRONT

- **Matching interior standard**
- Removable plumbing skirt to ease access for plumbing installation and repair
- Hole plugs not provided
- **Altered depth available in 23" and 21" only**
- **Not ADA compliant**

NEW ESBRB31.5FH AD
ESBRB33FH AD
ESBRB36FH AD

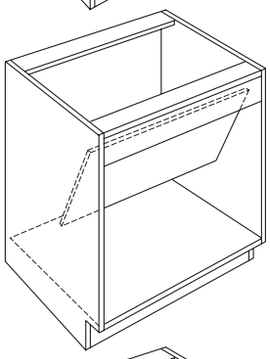

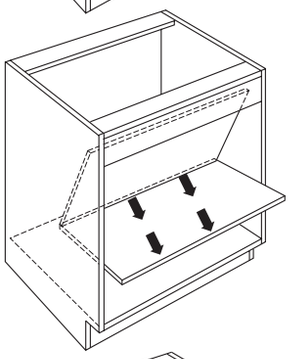

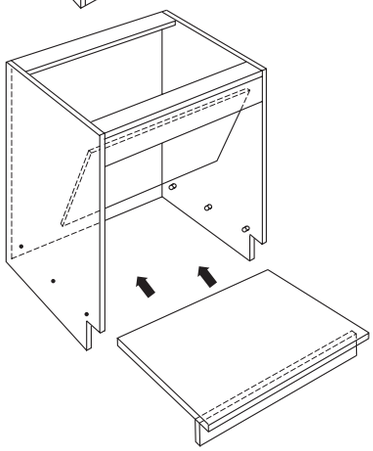

HOW TO CONVERT REMOVABLE BOTTOM CABINET:

1. Remove the staples that hold the shipping strap along the toe board. This strap holds the end panels together during transportation
2. Remove both doors.
3. Lift the bottom upwards and remove the bottom through the front opening (the bottom sits on six steel pins and is notched to keep it from moving.)
4. Remove the steel pins and hinge base plates from the end panels. The plumbing skirt is designed to be removed during installation. This allows plumber access for installation and repair.

NEW

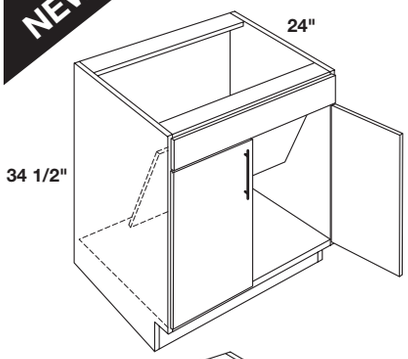

TWO DOOR SINK BASE CABINETS WITH REMOVABLE FRONT

- Dummy drawer front
- **Matching interior standard**
- Removable plumbing skirt to ease access for plumbing installation and repair
- Hole plugs not provided
- **Altered depth available in 23" and 21" only**
- **Not ADA compliant**

ESBRB31.5 AD
ESBRB33 AD
ESBRB36 AD

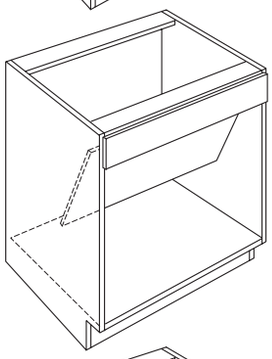

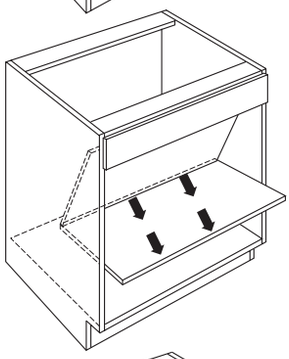

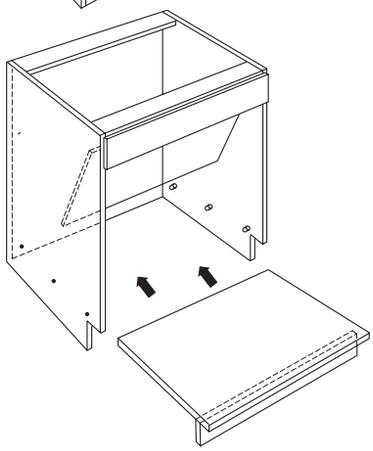

HOW TO CONVERT REMOVABLE BOTTOM CABINET:

1. Remove the staples that hold the shipping strap along the toe board. This strap holds the end panels together during transportation
2. Remove both doors.
3. Lift the bottom upwards and remove the bottom through the front opening (the bottom sits on six steel pins and is notched to keep it from moving.)
4. Remove the steel pins and hinge base plates from the end panels. The plumbing skirt is designed to be removed during installation. This allows plumber access for installation and repair.

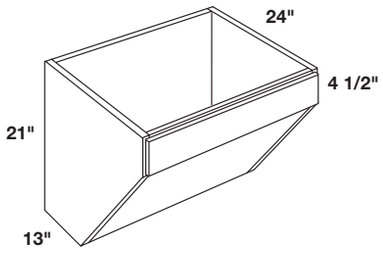

HANGING WALL SINK BASE PLUMBING SKIRTS

- Dummy drawer front
- **Altered depth available in 23" and 21" only**

EHWSB31.5PS AD
EHWSB33PS AD
EHWSB36PS AD

BASE SPECIALTY ITEMS

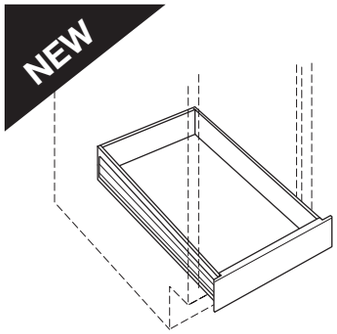

ROLL-OUT SHELF TRAYS

- White box roll-out shelf tray kits
- Shipped loose for field installation
- **Replaces full-depth shelf in base cabinet**
- Not compatible with cabinets ordered with standard half-depth shelf

21" DEEP ROLL-OUT SHELF TRAYS

EST12x21 (Fits 12" wide cabinets)
EST15x21 (Fits 15" wide cabinets)
EST18x21 (Fits 18" wide cabinets)
EST21x21 (Fits 21" wide cabinets)
EST24x21 (Fits 24" wide cabinets)

23" DEEP ROLL-OUT SHELF TRAYS

EST12x23 (Fits 12" wide cabinets)
EST15x23 (Fits 15" wide cabinets)
EST18x23 (Fits 18" wide cabinets)
EST21x23 (Fits 21" wide cabinets)
EST24x23 (Fits 24" wide cabinets)

24" DEEP ROLL-OUT SHELF TRAYS

EST12 (Fits 12" wide cabinets)
EST15 (Fits 15" wide cabinets)
EST18 (Fits 18" wide cabinets)
EST21 (Fits 21" wide cabinets)
EST24 (Fits 24" wide cabinets)

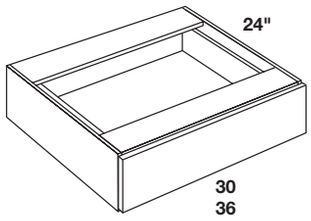

SINGLE DESK CABINET DRAWERS

- One thin desk drawer
- **Altered depth available in 23" and 21" only**

EDD30 AD
EDD36 AD

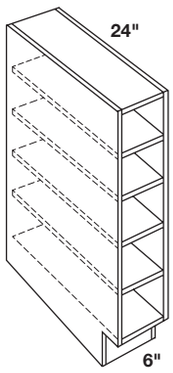

BASE WINE CABINET

- Holds five bottles of wine
- Matching interior
- Shelves are not adjustable
- Grain pattern runs vertically regardless of style ordered
- **Not available in altered depth**

EBWC6

BLIND BASE CABINET INSTRUCTIONS

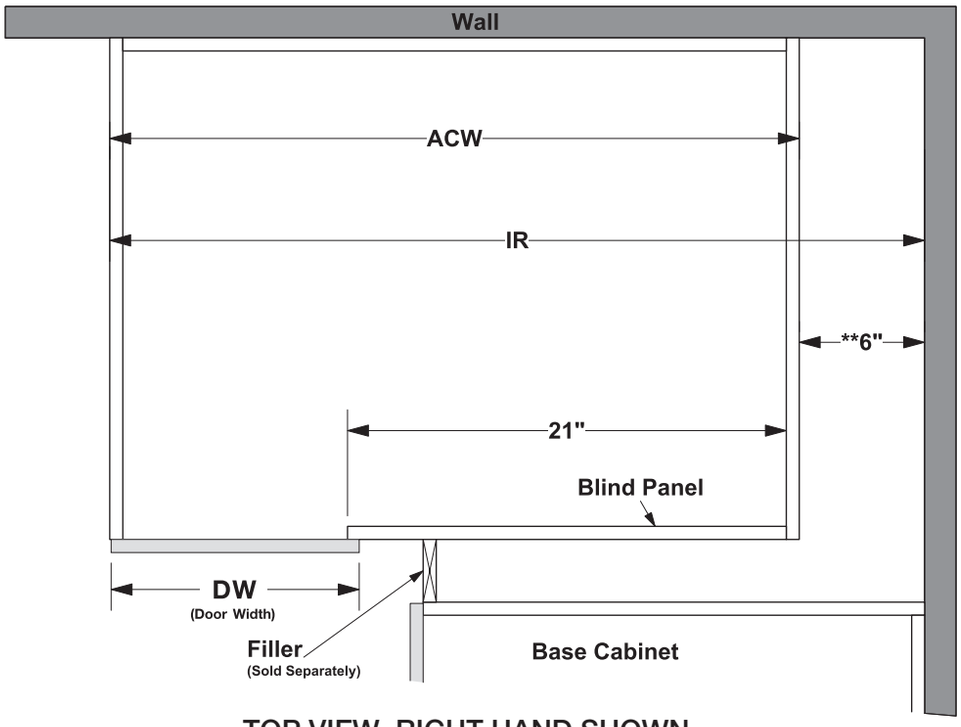

TOP VIEW, RIGHT HAND SHOWN

BLIND BASE CABINETS BY WIDTH

CABINET	ACW	IR	DW
EBLB36/39	30"	36" – 41"	8-7/8"
EBLB39/42	33"	39" – 44"	11-7/8"
EBLB42/45	36"	42" – 47"	14-7/8"
EBLB45/48	39"	45" – 50"	17-7/8"
EBLB48/51	42"	48" - 53"	20-7/8"

Must be ordered with proper L or R designation. Not reversible in the field.
** Must be installed at a minimum of 6" from the adjacent wall.

BLIND CABINETS LEGEND	
ACW	The actual cabinet width
IR	The recommended installation range from the adjacent wall
DW	DW = ACW - Blind Panel - (5/8") 2

ADDITIONAL CORNER CLEARANCE GUIDELINES FOR BASE CABINETS	
USING PULLS & KNOBS	Add a minimum of 1 1/2" for door/drawer clearance past adjacent pulls and knobs
ADJACENT APPLIANCES	Consult appliance manufacturers' installation details

BACK SIDE OF 3.11 DOES NOT PRINT

studio full access®

CABINET SERIES

Tall Cabinets

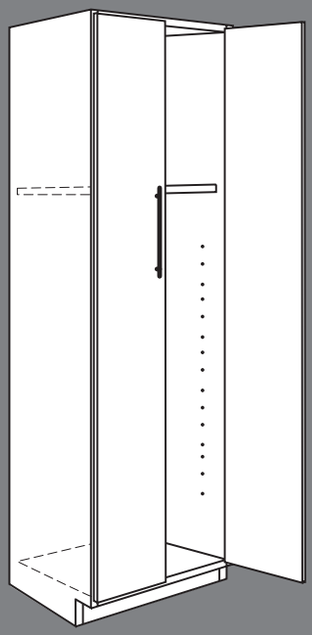

studio full access®

CABINET SERIES

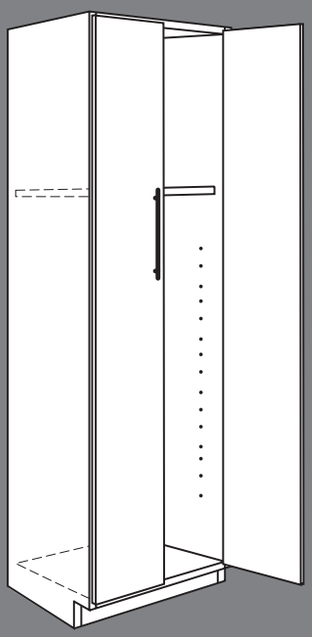

Tall Cabinets

WARDROBE CABINETS

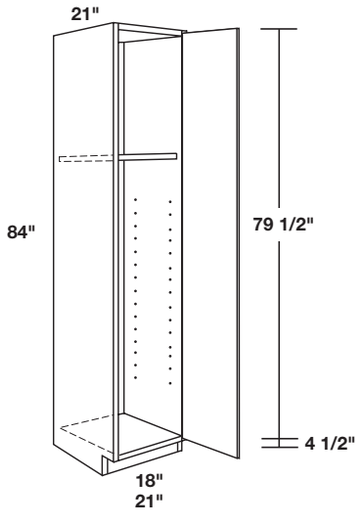

ECLU2121x84 R shown

84" HIGH x 21" DEEP SINGLE DOOR WARDROBE CABINETS

- Wardrobe cabinets have one fixed shelf
- Additional shelves may be ordered separately, see page 4.12
- Wardrobe cabinets have three hinges per door
- Closet rod kits may be ordered separately for ECLU_____ cabinets, see page 4.5

WARDROBE CABINETS WITHOUT ROD	WARDROBE CABINETS WITH ROD
18" WIDE	**18" WIDE**
ECLU1821x84 L or R	ECLR1821x84 L or R
21" WIDE	**21" WIDE**
ECLU2121x84 L or R	ECLR2121x84 L or R

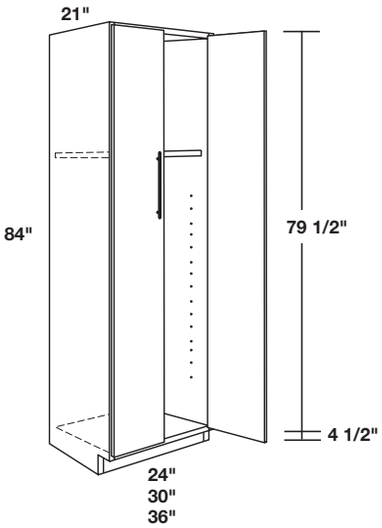

ECLU3021x84 shown

84" HIGH x 21" DEEP TWO DOOR WARDROBE CABINETS

- Wardrobe cabinets have one fixed shelf
- Additional shelves may be ordered separately, see page 4.12
- Wardrobe cabinets have three hinges per door
- Closet rod kits may be ordered separately for ECLU_____ cabinets, see page 4.5

WARDROBE CABINETS WITHOUT ROD	WARDROBE CABINETS WITH ROD
24" WIDE	**24" WIDE**
ECLU2421x84	ECLR2421x84
30" WIDE	**30" WIDE**
ECLU3021x84	ECLR3021x84
36" WIDE	**36" WIDE**
ECLU3621x84	ECLR3621x84

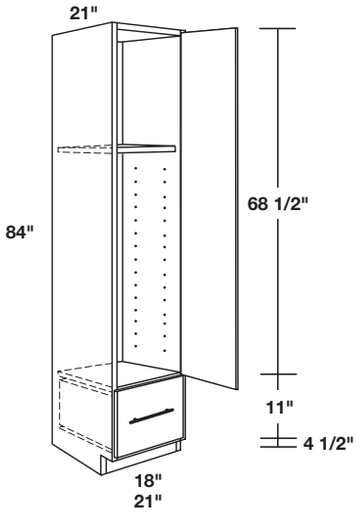

ECLD2121x84 R shown

84" HIGH x 21" DEEP SINGLE DOOR AND DRAWER WARDROBE CABINETS

- Wardrobe cabinets have one fixed shelf
- Additional shelves may be ordered separately, see page 4.12
- Wardrobe cabinets have three hinges per door
- Closet rod kits may be ordered separately for ECLD_____ cabinets, see page 4.5
- Cabinet has one drawer on bottom

WARDROBE CABINETS WITHOUT ROD	WARDROBE CABINETS WITH ROD
18" WIDE	**18" WIDE**
ECLD1821x84 L or R	ECLRD1821x84 L or R
21" WIDE	**21" WIDE**
ECLD2121x84 L or R	ECLRD2121x84 L or R

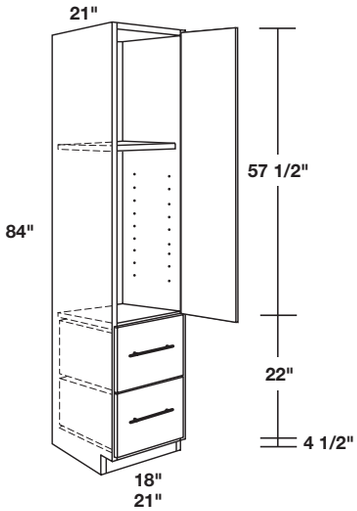

ECLD2121x84-2 R shown

84" HIGH x 21" DEEP SINGLE DOOR AND TWO DRAWER WARDROBE CABINETS

- Wardrobe cabinets have one fixed shelf
- Additional shelves may be ordered separately, see page 4.12
- Wardrobe cabinets have three hinges per door
- Closet rod kits may be ordered separately for ECLD_____ cabinets, see page 4.5
- Cabinet has two drawers on bottom

WARDROBE CABINETS WITHOUT ROD	WARDROBE CABINETS WITH ROD
18" WIDE	**18" WIDE**
ECLD1821x84-2 L or R	ECLRD1821x84-2 L or R
21" WIDE	**21" WIDE**
ECLD2121x84-2 L or R	ECLRD2121x84-2 L or R

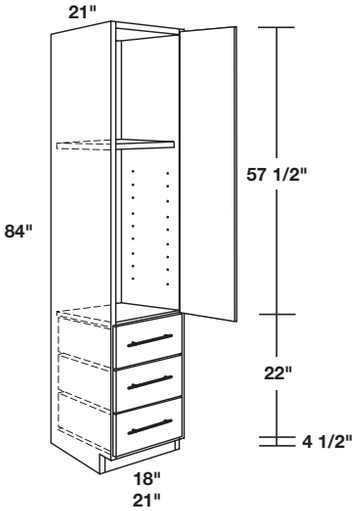

ECLD2121x84-3 R shown

84" HIGH x 21" DEEP SINGLE DOOR AND THREE DRAWER WARDROBE CABINETS

- Wardrobe cabinets have one fixed shelf
- Additional shelves may be ordered separately, see page 4.12
- Wardrobe cabinets have three hinges per door
- Closet rod kits may be ordered separately for ECLD_____ cabinets, see page 4.5
- Cabinet has three drawers on bottom

WARDROBE CABINETS WITHOUT ROD	WARDROBE CABINETS WITH ROD
18" WIDE	**18" WIDE**
ECLD1821x84-3 L or R	ECLRD1821x84-3 L or R
21" WIDE	**21" WIDE**
ECLD2121x84-3 L or R	ECLRD2121x84-3 L or R

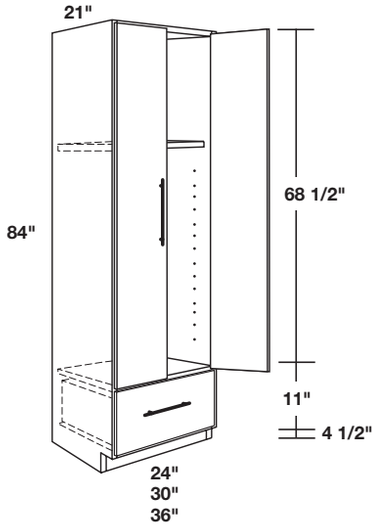

ECLD3021x84 shown

84" HIGH x 21" DEEP TWO DOOR AND DRAWER WARDROBE CABINETS

- Wardrobe cabinets have one fixed shelf
- Additional shelves may be ordered separately, see page 4.12
- Wardrobe cabinets have three hinges per door
- Closet rod kits may be ordered separately for ECLD_____ cabinets, see page 4.5
- Cabinet has one drawer on bottom

WARDROBE CABINETS WITHOUT ROD	WARDROBE CABINETS WITH ROD
24" WIDE	**24" WIDE**
ECLD2421x84	ECLRD2421x84
30" WIDE	**30" WIDE**
ECLD3021x84	ECLRD3021x84
36" WIDE	**36" WIDE**
ECLD3621x84	ECLRD3621x84

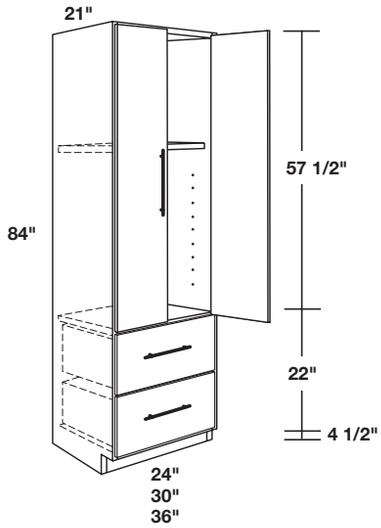

ECLD3021x84-2 shown

84" HIGH x 21" DEEP TWO DOOR AND TWO DRAWER WARDROBE CABINETS

- Wardrobe cabinets have one fixed shelf
- Additional shelves may be ordered separately, see page 4.12
- Wardrobe cabinets have three hinges per door
- Closet rod kits may be ordered separately for ECLD_____ cabinets, see page 4.5
- Cabinet has two drawers on bottom

WARDROBE CABINETS WITHOUT ROD	WARDROBE CABINETS WITH ROD
24" WIDE	**24" WIDE**
ECLD2421x84-2	ECLRD2421x84-2
30" WIDE	**30" WIDE**
ECLD3021x84-2	ECLRD3021x84-2
36" WIDE	**36" WIDE**
ECLD3621x84-2	ECLRD3621x84-2

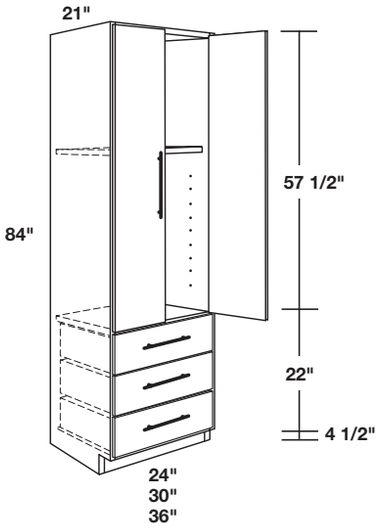

ECLD302184-3 shown

84" HIGH x 21" DEEP TWO DOOR AND THREE DRAWER WARDROBE CABINETS

- Wardrobe cabinets have one fixed shelf
- Additional shelves may be ordered separately, see page 4.12
- Wardrobe cabinets have three hinges per door
- Closet rod kits may be ordered separately for ECLD_____ cabinets, see page 4.5
- Cabinet has three drawers on bottom

WARDROBE CABINETS WITHOUT ROD	WARDROBE CABINETS WITH ROD
24" WIDE	**24" WIDE**
ECLD2421x84-3	ECLRD2421x84-3
30" WIDE	**30" WIDE**
ECLD3021x84-3	ECLRD3021x84-3
36" WIDE	**36" WIDE**
ECLD3621x84-3	ECLRD3621x84-3

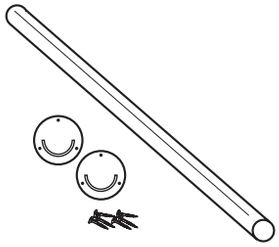

CLOSET ROD KITS

- For use with ECLU____ and ECLD____ cabinets
- Field installation is required
- Contains one polished steel closet rod, two support brackets, and six screws

ECLOSETROD18
ECLOSETROD21
ECLOSETROD24
ECLOSETROD30
ECLOSETROD36

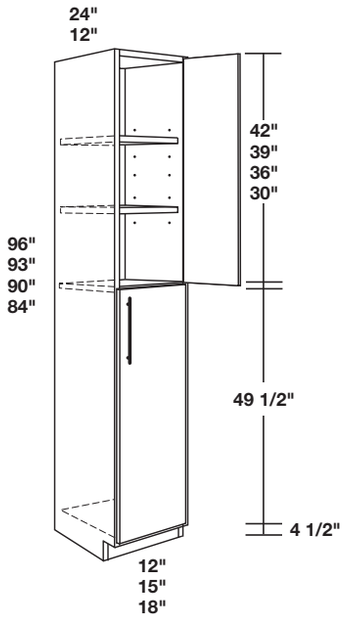

EUC1524x96 R shown

96", 93", 90" or 84" HIGH x 12" or 24" DEEP SINGLE DOOR WIDE UTILITY CABINETS

- Upper section on 96" and 93" high utility cabinets has two shelves
  Upper section on 90" and 84" high utility cabinets has one shelf
  Lower section of utility cabinets is shipped without shelves
- Additional shelves may be ordered separately, see page 4.12
- Upper section on 96" and 93" high utility cabinets has three hinges per door
  Upper section on 90" and 84" high utility cabinets has two hinges per door
  Lower section of utility cabinets has three hinges per door
- Toe kick shipped loose on 96" and 93" high cabinets
- Two doors total, single door top and bottom

12" DEEP UTILITY CABINETS

NEW **12" WIDE**
EUC1212x96 L or R
EUC1212x93 L or R
EUC1212x90 L or R
EUC1212x84 L or R

15" WIDE
EUC1512x96 L or R
NEW EUC1512x93 L or R
EUC1512x90 L or R
EUC1512x84 L or R

18" WIDE
EUC1812x96 L or R
NEW EUC1812x93 L or R
EUC1812x90 L or R
EUC1812x84 L or R

24" DEEP UTILITY CABINETS

NEW **12" WIDE**
EUC1224x96 L or R
EUC1224x93 L or R
EUC1224x90 L or R
EUC1224x84 L or R

15" WIDE
EUC1524x96 L or R
NEW EUC1524x93 L or R
EUC1524x90 L or R
EUC1524x84 L or R

18" WIDE
EUC1824x96 L or R
NEW EUC1824x93 L or R
EUC1824x90 L or R
EUC1824x84 L or R

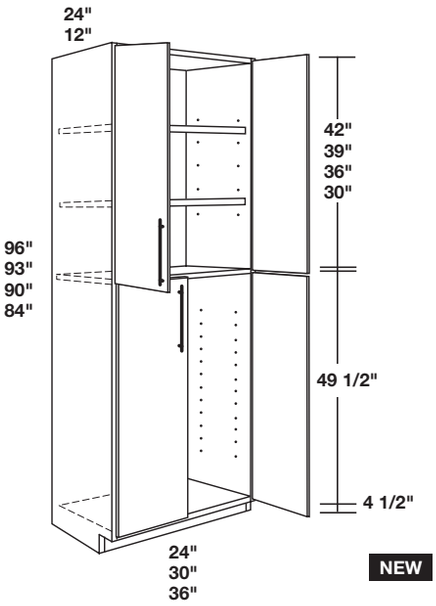

EUC3024x96 shown

96", 93", 90" or 84" HIGH x 12" or 24" DEEP TWO DOOR WIDE UTILITY CABINETS

- Upper section on 96" and 93" high utility cabinets has two shelves
  Upper section on 90" and 84" high utility cabinets has one shelf
  Lower section of utility cabinets is shipped without shelves
- Additional shelves may be ordered separately, see page 4.12
- Upper section on 96" and 93" high utility cabinets has three hinges per door
  Upper section on 90" and 84" high utility cabinets has two hinges per door
  Lower section of utility cabinets has three hinges per door
- Toe kick shipped loose on 96" and 93" high cabinets
- Four doors total, two doors top and bottom

12" DEEP UTILITY CABINETS

24" WIDE

EUC2412x96
NEW EUC2412x93
EUC2412x90
EUC2412x84

24" DEEP UTILITY CABINETS

24" WIDE

EUC2424x96
NEW EUC2424x93
EUC2424x90
EUC2424x84

30" WIDE

EUC3024x96
NEW EUC3024x93
EUC3024x90
EUC3024x84

36" WIDE

EUC3624x96
NEW EUC3624x93
EUC3624x90
EUC3624x84

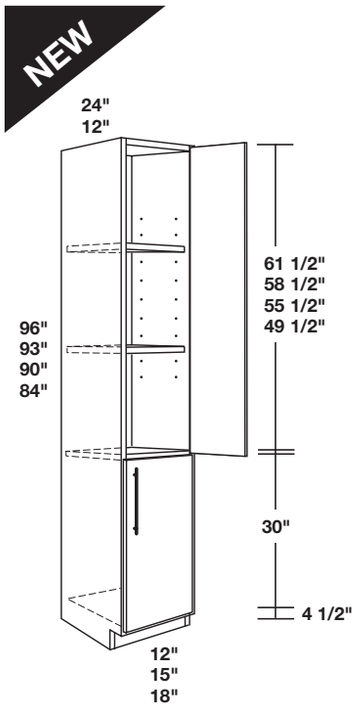

EUC1524x96 R shown

96", 93", 90" or 84" HIGH x 12" or 24" DEEP SINGLE DOOR WIDE INVERTED UTILITY CABINETS

- Upper section on 96" and 93" high utility cabinets has two shelves
  Upper section on 90" and 84" high utility cabinets has one shelf
  Lower section of utility cabinets is shipped without shelves
- Additional shelves may be ordered separately, see page 4.12
- Upper section of inverted utility cabinets has three hinges per door Lower section of utility cabinets has two hinges per door
- Toe kick shipped loose on 96" and 93" high cabinets
- Two doors total, single door top and bottom

12" DEEP INVERTED UTILITY CABINETS

12" WIDE
EIUC1212x96 L or R
EIUC1212x93 L or R
EIUC1212x90 L or R
EIUC1212x84 L or R

15" WIDE
EIUC1512x96 L or R
EIUC1512x93 L or R
EIUC1512x90 L or R
EIUC1512x84 L or R

18" WIDE
EIUC1812x96 L or R
EIUC1812x93 L or R
EIUC1812x90 L or R
EIUC1812x84 L or R

24" DEEP INVERTED UTILITY CABINETS

12" WIDE
EIUC1224x96 L or R
EIUC1224x93 L or R
EIUC1224x90 L or R
EIUC1224x84 L or R

15" WIDE
EIUC1524x96 L or R
EIUC1524x93 L or R
EIUC1524x90 L or R
EIUC1524x84 L or R

18" WIDE
EIUC1824x96 L or R
EIUC1824x93 L or R
EIUC1824x90 L or R
EIUC1824x84 L or R

NEW

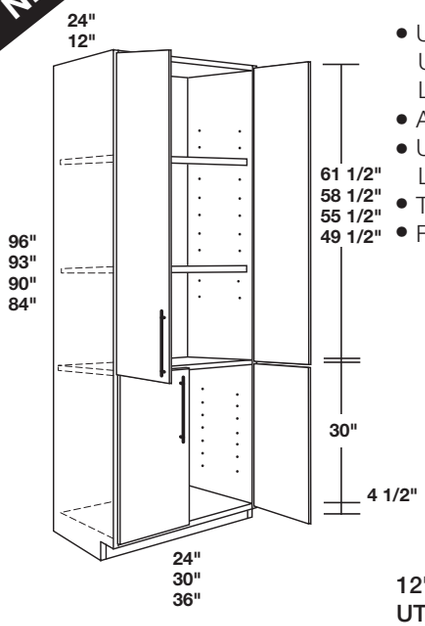

EUC3024x96 shown

96", 93", 90" or 84" HIGH x 12" or 24" DEEP TWO DOOR WIDE INVERTED UTILITY CABINETS

- Upper section on 96" and 93" high utility cabinets has two shelves
  Upper section on 90" and 84" high utility cabinets has one shelf
  Lower section of utility cabinets is shipped without shelves
- Additional shelves may be ordered separately, see page 4.12
- Upper section of inverted utility cabinets has three hinges per door
  Lower section of utility cabinets has two hinges per door
- Toe kick shipped loose on 96" and 93" high cabinets
- Four doors total, two doors top and bottom

12" DEEP INVERTED UTILITY CABINETS

24" WIDE

EIUC2412x96
EIUC2412x93
EIUC2412x90
EIUC2412x84

24" DEEP INVERTED UTILITY CABINETS

24" WIDE

EIUC2424x96
EIUC2424x93
EIUC2424x90
EIUC2424x84

30" WIDE

EIUC3024x96
EIUC3024x93
EIUC3024x90
EIUC3024x84

36" WIDE

EIUC3624x96
EIUC3624x93
EIUC3624x90
EIUC3624x84

OVEN CABINETS

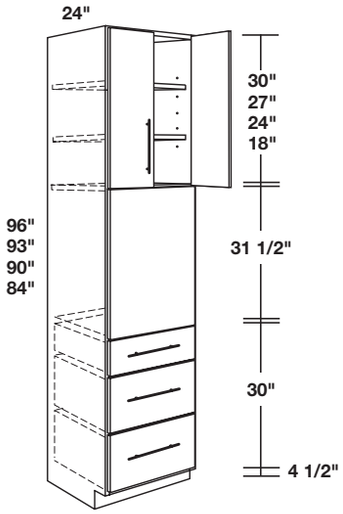

EOV27Dx96 shown

96", 93", 90" or 84" HIGH x 24" DEEP TWO DOOR AND THREE DRAWER SINGLE OVEN CABINETS

- 96" and 93" high oven cabinets have two adjustable shelves
  90" and 84" high oven cabinets have one adjustable shelf
- Oven cabinets have two hinges per door
- EOV_D cabinets have one standard-depth and two deep drawers on bottom
- Toe kick shipped loose on 96" and 93" high cabinets
- Oven cabinet comes with full coverage panel
- On-site trimming required based upon specs for oven
- **NOTE: See oven cut-out dimensions on page 4.14**

27" WIDE
EOV27Dx96
NEW EOV27Dx93
EOV27Dx90
EOV27Dx84

33" WIDE
EOV33Dx96
NEW EOV33Dx93
EOV33Dx90
EOV33Dx84

30" WIDE
EOV30Dx96
NEW EOV30Dx93
EOV30Dx90
EOV30Dx84

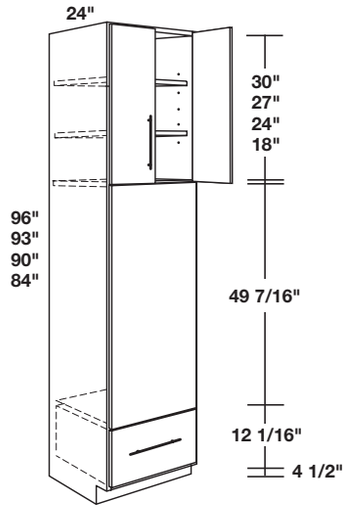

EOV27Sx96 shown

96", 93", 90" or 84" HIGH x 24" DEEP TWO DOOR AND SINGLE DRAWER DOUBLE OVEN CABINETS

- 96" and 93" high oven cabinets have two adjustable shelves
  90" and 84" high oven cabinets have one adjustable shelf
- Oven cabinets have two hinges per door
- EOV_S cabinets have one single deep drawer on bottom
- Toe kick shipped loose on 96" and 93" high cabinets
- Oven cabinet comes with full coverage panel
- On-site trimming required based upon specs for oven
- **NOTE: See oven cut-out dimensions on page 4.14**

27" WIDE
EOV27Sx96
NEW EOV27Sx93
EOV27Sx90
EOV27Sx84

33" WIDE
EOV33Sx96
NEW EOV33Sx93
EOV33Sx90
EOV33Sx84

30" WIDE
EOV30Sx96
NEW EOV30Sx93
EOV30Sx90
EOV30Sx84

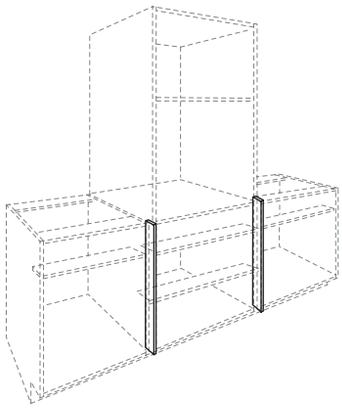

HEAT SHIELD KIT

- Field installation accessory
- Recommended for use as a heat shield for all thermofoil door styles
- Protects doors and drawer fronts from adjacent heat source (built in ovens, under counter ovens, drop-in or free-standing ranges)
- Kit contents: (2) white 1/16" thick x 1-9/16" x 30-1/2" metal heat shields

EHSK

LOOSE SHELVES

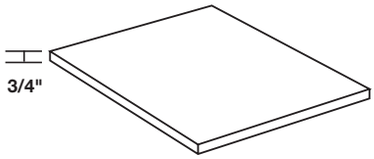

UTILITY CABINET SHELVES

- 3/4" thick shelves for use with tall cabinets
- Each shelf shipped with 4 shelf clips

Cabinet Nomenclature	Shelf Nomenclature
WARDROBE CABINETS	
ECLU1821x84L or R	EUCS1821
ECLR1821x84L or R	EUCS1821
ECLU2121x84L or R	EUCS2121
ECLR2121x84L or R	EUCS2121
ECLU2421x84	EUCS2421
ECLR2421x84	EUCS2421
ECLU3021x84	EUCS3021
ECLR3021x84	EUCS3021
ECLU3621x84	EUCS3621
ECLR3621x84	EUCS3621
ECLD1821x84L or R	EUCS1821
ECLRD1821x84L or R	EUCS1821
ECLD1821x84-2L or 2R	EUCS1821
ECLRD1821x84-2L or 2R	EUCS1821
ECLD1821x84-3L or 3R	EUCS1821
ECLRD1821x84-3L or 3R	EUCS1821
ECLD2121x84L or R	EUCS2121
ECLRD2121x84L or R	EUCS2121
ECLD2121x84-2L or 2R	EUCS2121
ECLRD2121x84-2L or 2R	EUCS2121
ECLD2121x84-3L or 3R	EUCS2121
ECLRD2121x84-3L or 3R	EUCS2121
ECLD2421x84	EUCS2421
ECLRD2421x84	EUCS2421
ECLD2421x84-2	EUCS2421
ECLRD2421x84-2	EUCS2421
ECLD2421x84-3	EUCS2421
ECLRD2421x84-3	EUCS2421
ECLD3021x84	EUCS3021
ECLRD3021x84	EUCS3021
ECLD3021x84-2	EUCS3021
ECLRD3021x84-2	EUCS3021
ECLD3021x84-3	EUCS3021
ECLRD3021x84-3	EUCS3021
ECLD3621x84	EUCS3621
ECLRD3621x84	EUCS3621
ECLD3621x84-2	EUCS3621
ECLRD3621x84-2	EUCS3621
ECLD3621x84-3	EUCS3621
ECLRD3621x84-3	EUCS3621

Cabinet Nomenclature	Shelf Nomenclature
UTILITY CABINETS	
EUC1212X84L or R	**EUCS1212**
EUC1212X90L or R	**EUCS1212**
EUC1212X93L or R	**EUCS1212**
EUC1212X96L or R	**EUCS1212**
EUC1224X84L or R	**EUCS1224**
EUC1224X90L or R	**EUCS1224**
EUC1224X93L or R	**EUCS1224**
EUC1224X96L or R	**EUCS1224**
EUC1512X84L or R	EUCS1512
EUC1512X90L or R	EUCS1512
EUC1512X93L or R	**EUCS1512**
EUC1512X96L or R	EUCS1512
EUC1524X84L or R	EUCS1524
EUC1524X90L or R	EUCS1524
EUC1524X93L or R	**EUCS1524**
EUC1524X96L or R	EUCS1524
EUC1812X84L or R	EUCS1812
EUC1812X90L or R	EUCS1812
EUC1812X93L or R	**EUCS1812**
EUC1812X96L or R	EUCS1812
EUC1824X84L or R	EUCS1824
EUC1824X90L or R	EUCS1824
EUC1824X93L or R	**EUCS1824**
EUC1824X96L or R	EUCS1824
EUC2412X84	EUCS2412
EUC2412X90	EUCS2412
EUC2412X93	**EUCS2412**
EUC2412X96	EUCS2412
EUC2424X84	EUCS2424
EUC2424X90	EUCS2424
EUC2424X93	**EUCS2424**
EUC2424X96	EUCS2424
EUC3024X84	EUCS3024
EUC3024X90	EUCS3024
EUC3024X93	**EUCS3024**
EUC3024X96	EUCS3024
EUC3624X84	EUCS3624
EUC3624X90	EUCS3624
EUC3624X93	**EUCS3624**
EUC3624X96	EUCS3624

Cabinet Nomenclature	Shelf Nomenclature
UTILITY CABINETS continued	
EIUC1212X84L or R	**EUCS1212**
EIUC1212X90L or R	**EUCS1212**
EIUC1212X93L or R	**EUCS1212**
EIUC1212X96L or R	**EUCS1212**
EIUC1224X84L or R	**EUCS1224**
EIUC1224X90L or R	**EUCS1224**
EIUC1224X93L or R	**EUCS1224**
EIUC1224X96L or R	**EUCS1224**
EIUC1512X84L or R	EUCS1512
EIUC1512X90L or R	EUCS1512
EIUC1512X93L or R	**EUCS1512**
EIUC1512X96L or R	EUCS1512
EIUC1524X84L or R	EUCS1524
EIUC1524X90L or R	EUCS1524
EIUC1524X93L or R	**EUCS1524**
EIUC1524X96L or R	EUCS1524
EIUC1812X84L or R	EUCS1812
EIUC1812X90L or R	EUCS1812
EIUC1812X93L or R	**EUCS1812**
EIUC1812X96L or R	EUCS1812
EIUC1824X84L or R	EUCS1824
EIUC1824X90L or R	EUCS1824
EIUC1824X93L or R	**EUCS1824**
EIUC1824X96L or R	EUCS1824
EIUC2412X84	EUCS2412
EIUC2412X90	EUCS2412
EIUC2412X93	**EUCS2412**
EIUC2412X96	EUCS2412
EIUC2424X84	EUCS2424
EIUC2424X90	EUCS2424
EIUC2424X93	**EUCS2424**
EIUC2424X96	EUCS2424
EIUC3024X84	EUCS3024
EIUC3024X90	EUCS3024
EIUC3024X93	**EUCS3024**
EIUC3024X96	EUCS3024
EIUC3624X84	EUCS3624
EIUC3624X90	EUCS3624
EIUC3624X93	**EUCS3624**
EIUC3624X96	EUCS3624

Cabinet Nomenclature	Shelf Nomenclature
OVEN CABINETS	
EOV27DX84	EUCS2724
EOV27DX90	EUCS2724
EOV27DX93	**EUCS2724**
EOV27DX96	EUCS2724
EOV27SX84	EUCS2724
EOV27SX90	EUCS2724
EOV27SX93	**EUCS2724**
EOV27SX96	EUCS2724
EOV30DX84	EUCS3024
EOV30DX90	EUCS3024
EOV30DX93	**EUCS3024**
EOV30DX96	EUCS3024
EOV30SX84	EUCS3024
EOV30SX90	EUCS3024
EOV30SX93	**EUCS3024**
EOV30SX96	EUCS3024
EOV33DX84	EUCS3324
EOV33DX90	EUCS3324
EOV33DX93	**EUCS3324**
EOV33DX96	EUCS3324
EOV33SX84	EUCS3324
EOV33SX90	EUCS3324
EOV33SX93	**EUCS3324**
EOV33SX96	EUCS3324
LINEN CABINETS	
EVLC1221X84L or R	EUCS1221
EVLC1521X84L or R	EUCS1521
EVLC1821X84L or R	EUCS1821
EVLC2121X84L or R	EUCS2121
EVLC2421X84L or R	EUCS2421
EIVLC1221X84L or R	**EUCS1221**
EIVLC1521X84L or R	**EUCS1521**
EIVLC1821X84L or R	**EUCS1821**
EIVLC2121X84L or R	**EUCS2121**
EIVLC2421X84L or R	**EUCS2421**

TALL SPECIALTY ITEMS

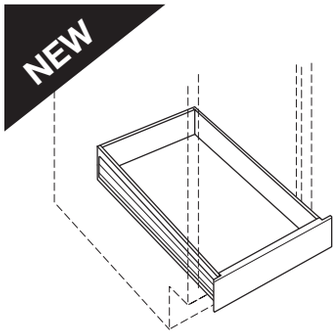

UTILITY ROLL-OUT SHELF TRAYS

- White box roll-out shelf tray kits
- Shipped loose for field installation
- **Replaces full-depth shelf in tall cabinet**

24" DEEP ROLL-OUT SHELF TRAYS

EST1224UC (Fits 12" wide cabinets)
EST1524UC (Fits 15" wide cabinets)
EST1824UC (Fits 18" wide cabinets)
EST2424UC (Fits 24" wide cabinets)
EST3024UC (Fits 30" wide cabinets)
EST3624UC (Fits 36" wide cabinets)

OVEN CUT-OUT INSTRUCTIONS

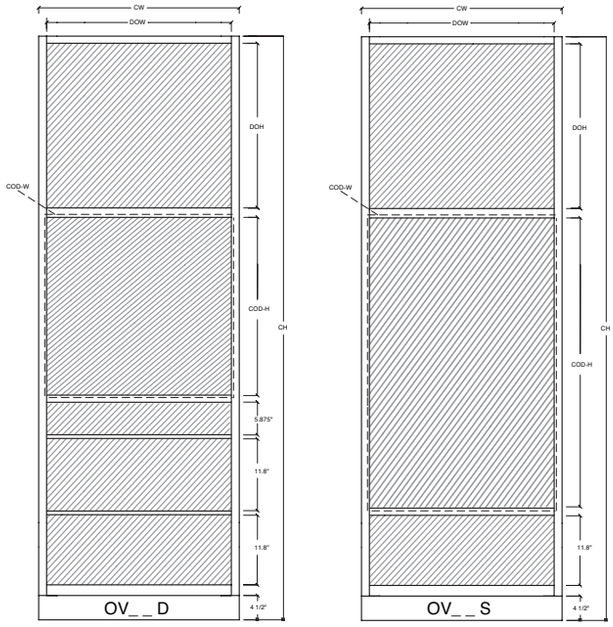

OVEN CABINET LEGEND			
ID	**DESCRIPTION**	**ID**	**DESCRIPTION**
CW	Cabinet Width	**DOW**	Door Opening Width
CH	Cabinet Height	**DOH**	Door Opening Height
COD-W	Max. Cut-Out Dimension – Width	**COD-H***	Max. Cut-Out Dimension – Height

OVEN CABINET CUT-OUTS AND DIMENSIONS						
PRODUCT ID	**CW**	**CH**	**DOW**	**DOH**	**COD-W**	**COD-H**
EOV27DX84	27"	84"	25 3/4"	16 3/4"	24 1/2"	31"
EOV27DX90	27"	90"	25 3/4"	22 3/4"	24 1/2"	31"
EOV27DX93	**27"**	**93"**	**25 3/4"**	**25 3/4"**	**24 1/2"**	**31"**
EOV27DX96	27"	96"	25 3/4"	28 3/4"	24 1/2"	31"
EOV27SX84	27"	84"	25 3/4"	16 3/4"	24 1/2"	48 15/16"
EOV27SX90	27"	90"	25 3/4"	22 3/4"	24 1/2"	48 15/16"
EOV27SX93	**27"**	**93"**	**25 3/4"**	**25 3/4"**	**24 1/2"**	**48 15/16"**
EOV27SX96	27"	96"	25 3/4"	28 3/4"	24 1/2"	48 15/16"
EOV30DX84	30"	84"	28 3/4"	16 3/4"	27 1/2"	31"
EOV30DX90	30"	90"	28 3/4"	22 3/4"	27 1/2"	31"
EOV30DX93	**30"**	**93"**	**28 3/4"**	**25 3/4"**	**27 1/2"**	**31"**
EOV30DX96	30"	96"	28 3/4"	28 3/4"	27 1/2"	31"
EOV30SX84	30"	84"	28 3/4"	16 3/4"	27 1/2"	48 15/16"
EOV30SX90	30"	90"	28 3/4"	22 3/4"	27 1/2"	48 15/16"
EOV30SX93	**30"**	**93"**	**28 3/4"**	**25 3/4"**	**27 1/2"**	**48 15/16"**
EOV30SX96	30"	96"	28 3/4"	28 3/4"	27 1/2"	48 15/16"
EOV33DX84	33"	84"	31 3/4"	16 3/4"	30 1/2"	31"
EOV33DX90	33"	90"	31 3/4"	22 3/4"	30 1/2"	31"
EOV33DX93	**33"**	**93"**	**31 3/4"**	**25 3/4"**	**30 1/2"**	**31"**
EOV33DX96	33"	96"	31 3/4"	28 3/4"	30 1/2"	31"
EOV33SX84	33"	84"	31 3/4"	16 3/4"	30 1/2"	48 15/16"
EOV33SX90	33"	90"	31 3/4"	22 3/4"	30 1/2"	48 15/16"
EOV33SX93	**33"**	**93"**	**31 3/4"**	**25 3/4"**	**30 1/2"**	**48 15/16"**
EOV33SX96	33"	96"	31 3/4"	28 3/4"	30 1/2"	48 15/16"

studio full access®

CABINET SERIES

Vanity Cabinets

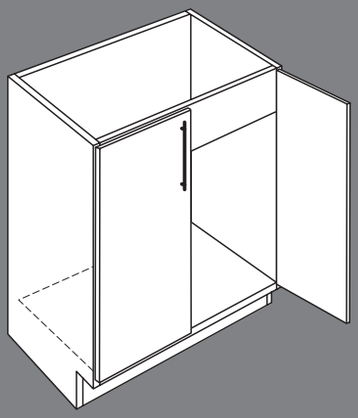

studio full access®

CABINET SERIES

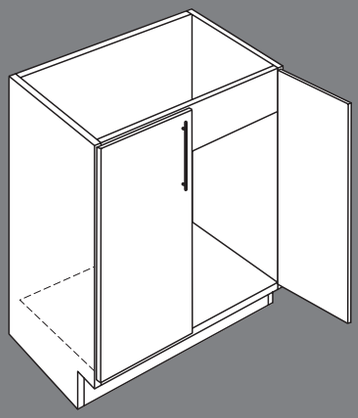

Vanity Cabinets

VANITY SINK BASE CABINETS

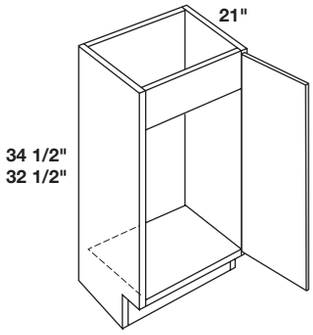

SINGLE DOOR FULL HEIGHT VANITY SINK BASE CABINETS

32 1/2" HIGH CABINETS

- EV18FH L or R AD
- EV21FH L or R AD
- EV24FH L or R AD

34 1/2" HIGH CABINETS

- EV18HFH L or R AD
- EV21HFH L or R AD
- EV24HFH L or R AD

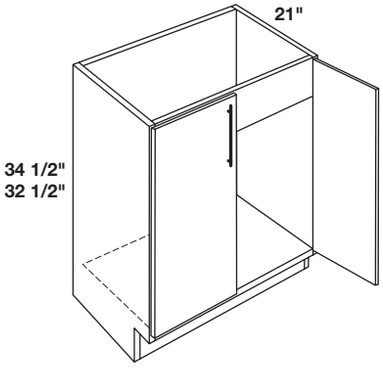

TWO DOOR FULL HEIGHT VANITY SINK BASE CABINETS

32 1/2" HIGH CABINETS

- EV24FH AD
- EV27FH AD
- EV30FH AD
- EV33FH AD
- EV36FH AD
- EV39FH AD
- EV42FH AD
- EV48FH AD

34 1/2" HIGH CABINETS

- EV24HFH AD
- EV27HFH AD
- EV30HFH AD
- EV33HFH AD
- EV36HFH AD
- EV39HFH AD
- EV42HFH AD
- EV48HFH AD

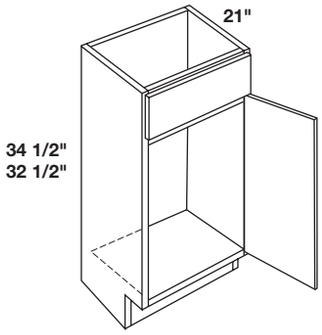

SINGLE DOOR VANITY SINK BASE CABINETS

- Dummy Drawer Front

32 1/2" HIGH CABINETS

- EV18 L or R AD
- EV21 L or R AD
- EV24 L or R AD

34 1/2" HIGH CABINETS

- EV18H L or R AD
- EV21H L or R AD
- EV24H L or R AD

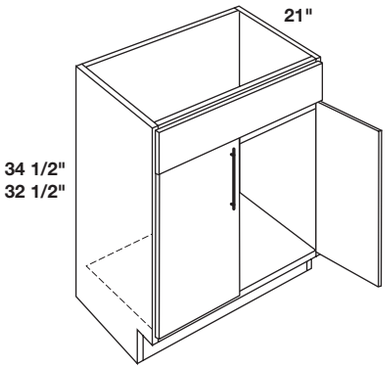

TWO DOOR VANITY SINK BASE CABINETS

- Dummy Drawer Front

32 1/2" HIGH CABINETS

- EV24 AD
- EV27 AD
- EV30 AD
- EV33 AD
- EV36 AD
- EV39 AD
- EV42 AD
- EV48 AD

34 1/2" HIGH CABINETS

- EV24H AD
- EV27H AD
- EV30H AD
- EV33H AD
- EV36H AD
- EV39H AD
- EV42H AD
- EV48H AD

VANITY DRAWER SINK BASE CABINETS

EVSDBU36-2 shown

VANITY DRAWER SINK BASE CABINETS

- One false front on top; one shallow u-shaped drawer in middle; one shallow standard drawer on bottom

32 1/2" HIGH CABINETS		34 1/2" HIGH CABINETS	
EVSDBU27-2	AD	EVSDBU27H-2	AD
EVSDBU30-2	AD	EVSDBU30H-2	AD
EVSDBU33-2	AD	EVSDBU33H-2	AD
EVSDBU36-2	AD	EVSDBU36H-2	AD

SINGLE DOOR VANITY BASE CABINETS

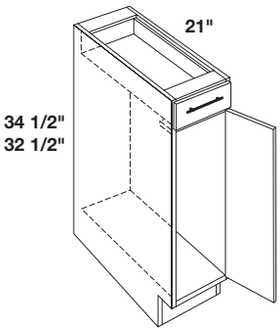

SINGLE DOOR AND DRAWER VANITY BASE CABINETS

32 1/2" HIGH CABINETS		34 1/2" HIGH CABINETS	
EVB12 L or R	AD	EVB12H L or R	AD
EVB15 L or R	AD	EVB15H L or R	AD
EVB18 L or R	AD	EVB18H L or R	AD
EVB21 L or R	AD	EVB21H L or R	AD
EVB24 L or R	AD	EVB24H L or R	AD

VANITY DRAWER BASE CABINETS

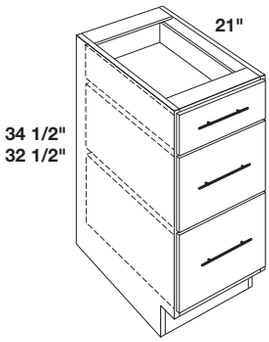

THREE DRAWER VANITY BASE CABINETS

- Cabinets have one standard-depth drawer on top and two deep drawers on bottom

32 1/2" HIGH CABINETS		34 1/2" HIGH CABINETS	
EVDB12-3	AD	EVDB12H-3	AD
EVDB15-3	AD	EVDB15H-3	AD
EVDB18-3	AD	EVDB18H-3	AD
EVDB21-3	AD	EVDB21H-3	AD
EVDB24-3	AD	EVDB24H-3	AD

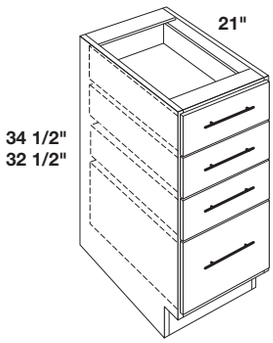

FOUR DRAWER VANITY BASE CABINETS

- Cabinets have three standard-depth drawers on top and one deep drawer on bottom

32 1/2" HIGH CABINETS		34 1/2" HIGH CABINETS	
EVDB12-4	AD	EVDB12H-4	AD
EVDB15-4	AD	EVDB15H-4	AD
EVDB18-4	AD	EVDB18H-4	AD
EVDB21-4	AD	EVDB21H-4	AD
EVDB24-4	AD	EVDB24H-4	AD

VANITY COMBINATION CABINETS

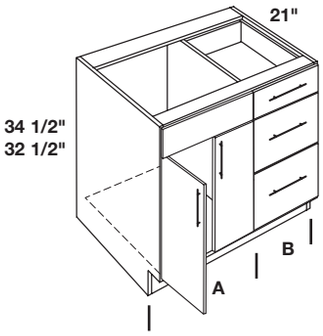

EVCDB36R shown

TWO DOOR VANITY DRAWER SINK BASE CABINETS

- Specify L or R for location of drawer bank
- Dummy drawer front above doors

	A	B
EVCDB36 / EVCDB36H	24"	12"
EVCDB42 / EVCDB42H	30"	12"
EVCDB48 / EVCDB48H	36"	12"

32 1/2" HIGH CABINETS

EVCDB36 L or R AD
EVCDB42 L or R AD
EVCDB48 L or R AD

34 1/2" HIGH CABINETS

EVCDB36H L or R AD
EVCDB42H L or R AD
EVCDB48H L or R AD

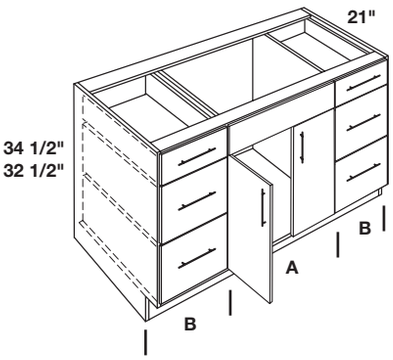

EVCDB48 shown

TWO DOOR COMBO VANITY SINK BASE CABINETS

- Includes 2 sets of 12" wide drawer stacks
- Dummy drawer front above doors

	A	B
EVCDB48 / EVCDB48H	24"	12"

32 1/2" HIGH CABINETS

EVCDB48 AD

34 1/2" HIGH CABINETS

EVCDB48H AD

FLOATING VANITY BASE CABINETS

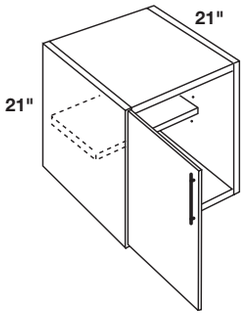

EFV1821FH L shown

SINGLE DOOR FULL HEIGHT FLOATING VANITY BASE CABINETS

- Comes with one shelf
- **NOTE: This cabinet includes a solid top to increase stability and strength; solid tops should not be cut or altered in any way on EFV____ cabinets. See page 5.9 for installation instructions**

EFV1221FH L or R
EFV1521FH L or R
EFV1821FH L or R
EFV2121FH L or R
EFV2421FH L or R

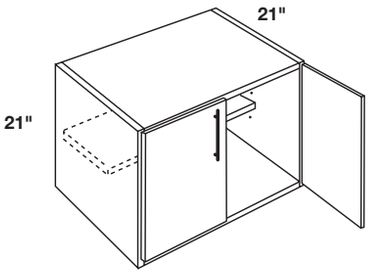

EFV3021FH shown

TWO DOOR FULL HEIGHT FLOATING VANITY BASE CABINETS

- Comes with one shelf
- **NOTE: This cabinet includes a solid top to increase stability and strength; solid tops should not be cut or altered in any way on EFV____ cabinets. See page 5.9 for installation instructions**

EFV2421FH
EFV2721FH
EFV3021FH
EFV3321FH
EFV3621FH

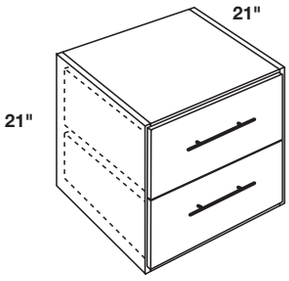

EFVDB2421-2 shown

FLOATING VANITY DRAWER BASE CABINETS

- **NOTE: This cabinet includes a solid top to increase stability and strength; solid tops should not be cut or altered in any way on EFVDB____ cabinets. See page 5.9 for installation instructions**

EFVDB1221-2
EFVDB1521-2
EFVDB1821-2
EFVDB2121-2
EFVDB2421-2

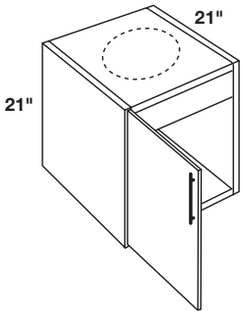

EFVS1821FH L shown

SINGLE DOOR FULL HEIGHT FLOATING VANITY SINK BASE CABINETS

- **NOTE: This cabinet includes a solid top to increase stability and strength; solid tops should not be cut or altered other than to remove the minimum amount needed to install a sink on EFVS____ cabinets. See page 5.9 for installation instructions**

EFVS1821FH L or R
EFVS2121FH L or R
EFVS2421FH L or R

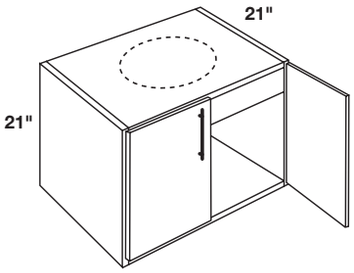

EFVS3021FH shown

TWO DOOR FULL HEIGHT FLOATING VANITY SINK BASE CABINETS

- **NOTE: This cabinet includes a solid top to increase stability and strength; solid tops should not be cut or altered other than to remove the minimum amount needed to install a sink on EFVS____ cabinets. See page 5.9 for installation instructions**

EFVS2421FH
EFVS2721FH
EFVS3021FH
EFVS3321FH
EFVS3621FH

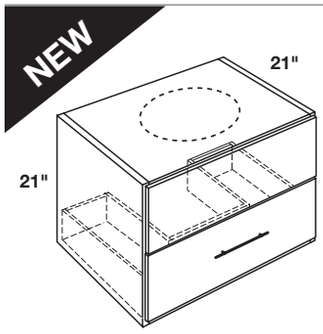

EFVSDBU3021 shown

FLOATING VANITY DRAWER SINK BASE CABINETS

- One false front on top; one shallow u-shaped drawer on bottom
- **NOTE: This cabinet includes a solid top to increase stability and strength; solid tops should not be cut or altered other than to remove the minimum amount needed to install a sink on EFVS____ cabinets. See page 5.9 for installation instructions**

EFVSDBU2721
EFVSDBU3021
EFVSDBU3321
EFVSDBU3621

VANITY WALL CABINET

- Vanity wall cabinet has two shelves
- Vanity wall cabinet has two hinges per door
- **Entirety of cabinet has matching interior standard**

EVW2236

VANITY LINEN CABINETS

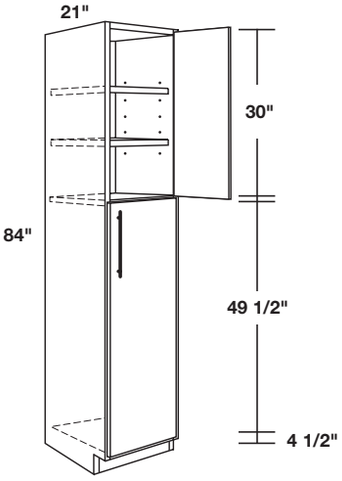

EVLC1821x84 R shown

84" HIGH SINGLE DOOR WIDE VANITY LINEN CABINETS

- Upper section of vanity linen cabinets has two shelves; lower section is shipped without shelves
- Additional shelves may be ordered separately, see page 4.12
- Upper section of vanity linen cabinets has two hinges per door
  Lower section of vanity linen cabinets has three hinges per door
- Two doors total, single door top and bottom

EVLC1221x84 L or R
EVLC1521x84 L or R
EVLC1821x84 L or R
EVLC2121x84 L or R
EVLC2421x84 L or R

NEW

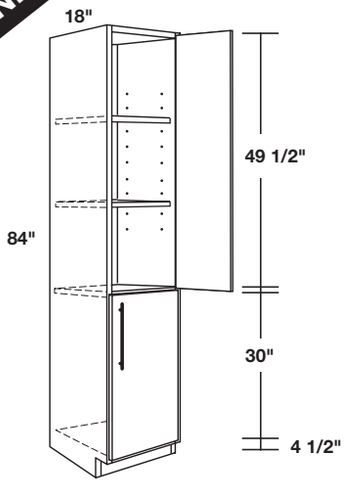

EIVLC1821x84 R shown

84" HIGH SINGLE DOOR WIDE INVERTED VANITY LINEN CABINETS

- Upper section of inverted vanity linen cabinets has two shelves; lower section is shipped without shelves
- Additional shelves may be ordered separately, see page 4.12
- Upper section of vanity linen cabinets has three hinges per door
  Lower section of vanity linen cabinets has two hinges per door
- Two doors total, single door top and bottom

EIVLC1221x84 L or R
EIVLC1521x84 L or R
EIVLC1821x84 L or R
EIVLC2121x84 L or R
EIVLC2421x84 L or R

FLOATING VANITY CABINET INSTALLATION INSTRUCTIONS

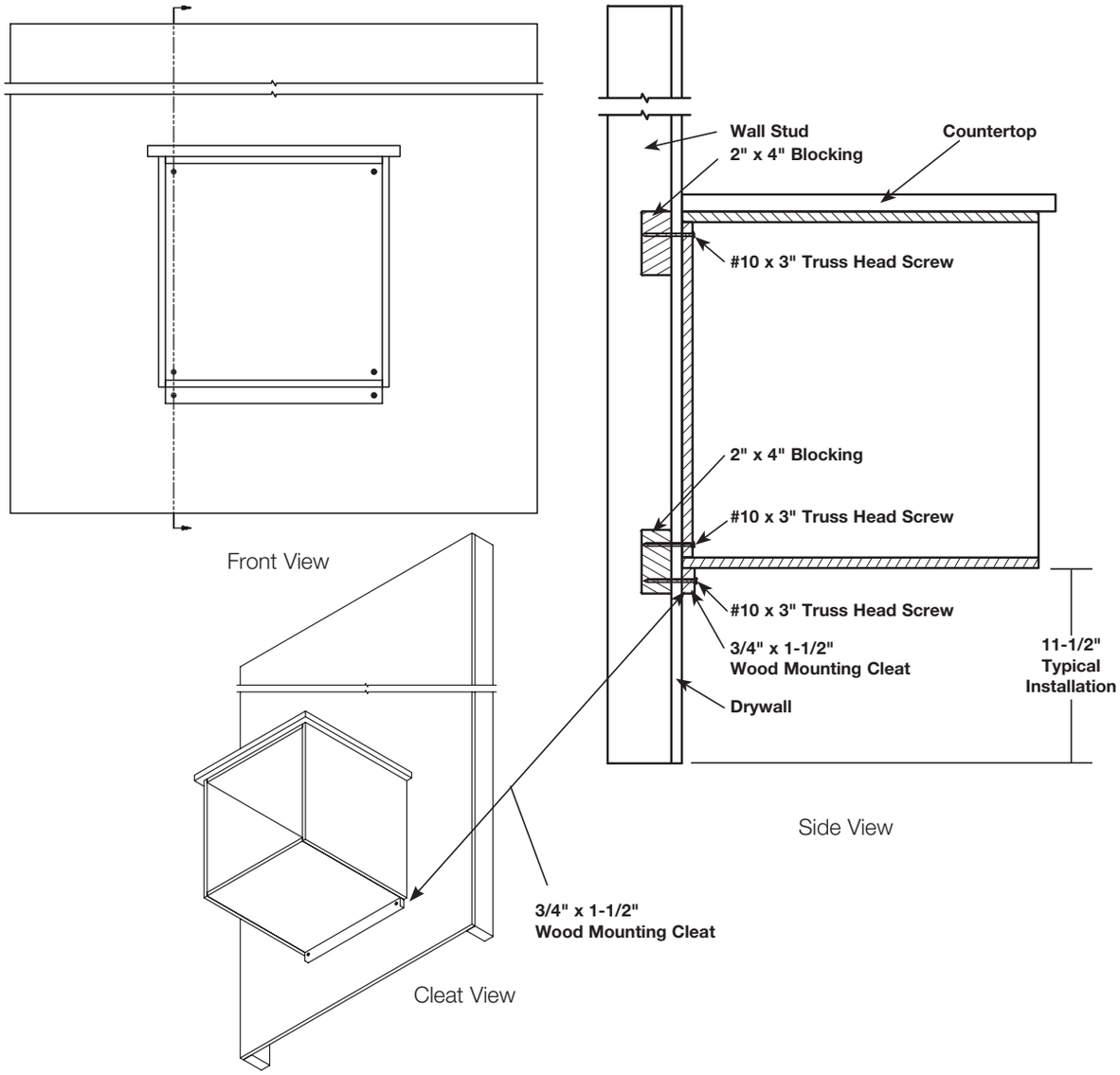

- Floating vanities have a weight limit of 300 lbs. (including countertops) when installed properly
- **DO NOT STAND ON THEM**
- Floating vanities should be anchored to the wall studs using a minimum of four (4) #10x3" Truss head cabinet mounting screws, with (minimum) one screw anchored no more than 6" from each end panel, and the remaining screws installed at equal intervals in between
- Floating vanities should also be supported underneath by a securely installed leg, cleat, or heavy-duty floating vanity bracket
- Wall blocking is strongly recommended to increase weight bearing capacity of the cabinet installation
- Floating vanities come with solid tops to increase stability and strength; solid tops should not be altered other than to remove the miminum amount needed to install a sink on EFVS____ cabinets

BACK SIDE OF 5.9 DOES NOT PRINT

studio full access®

CABINET SERIES

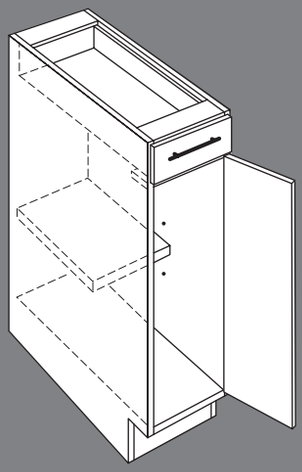

Universal Access Cabinets

studio full access®

CABINET SERIES

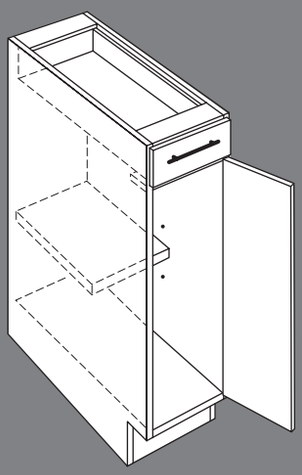

Universal Access Cabinets

UNIVERSAL ACCESS SINGLE DOOR BASE CABINETS

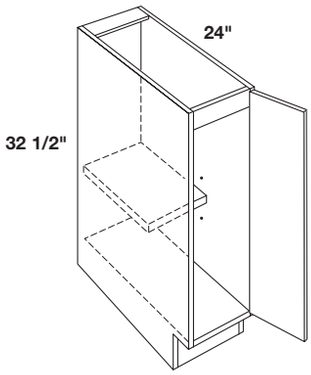

UNIVERSAL ACCESS SINGLE DOOR FULL HEIGHT BASE CABINETS

- One half-depth adjustable shelf
- **EHAB09FH does not have a shelf**

EHAB09FH L or R	AD	FDS
EHAB12FH L or R	AD	FDS
EHAB15FH L or R	AD	FDS
EHAB18FH L or R	AD	FDS
EHAB21FH L or R	AD	FDS
EHAB24FH L or R	AD	FDS

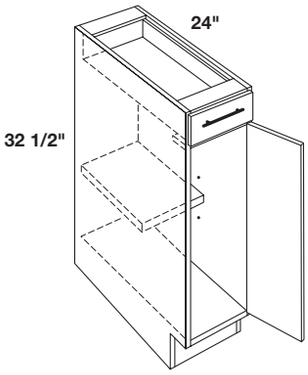

UNIVERSAL ACCESS SINGLE DOOR AND DRAWER BASE CABINETS

- One half-depth adjustable shelf
- **EHAB09 does not have a shelf**
- **EHAB09 not available with double wall drawer upgrade**

EHAB09 L or R	AD	FDS
EHAB12 L or R	AD	FDS
EHAB15 L or R	AD	FDS
EHAB18 L or R	AD	FDS
EHAB21 L or R	AD	FDS
EHAB24 L or R	AD	FDS

UNIVERSAL ACCESS TWO DOOR BASE CABINETS

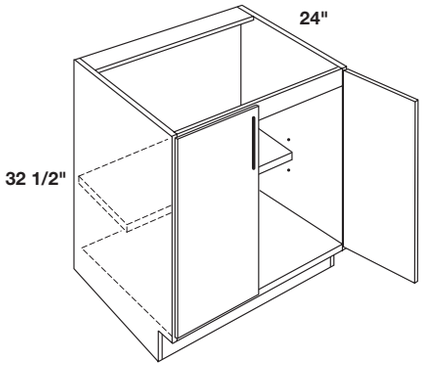

UNIVERSAL ACCESS TWO DOOR FULL HEIGHT BASE CABINETS

- One half-depth adjustable shelf

EHAB24FH	AD	FDS
EHAB27FH	AD	FDS
EHAB30FH	AD	FDS
EHAB33FH	AD	FDS
EHAB36FH	AD	FDS
EHAB39FH	AD	FDS

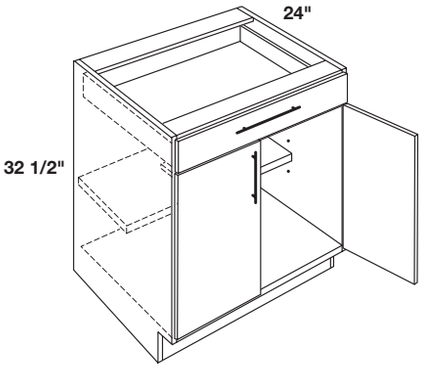

UNIVERSAL ACCESS TWO DOOR AND DRAWER BASE CABINETS

- One half-depth adjustable shelf

EHAB24	AD	FDS
EHAB27	AD	FDS
EHAB30	AD	FDS
EHAB33	AD	FDS
EHAB36	AD	FDS
EHAB39	AD	FDS

UNIVERSAL ACCESS DRAWER BASE CABINETS

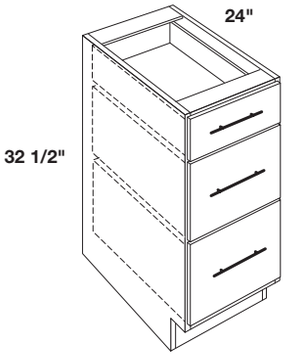

UNIVERSAL ACCESS THREE DRAWER BASE CABINETS

- One standard-depth drawer on top and two deep drawers on bottom
- Does not accommodate metal drawer files

EHADB12-3	AD
EHADB15-3	AD
EHADB18-3	AD
EHADB21-3	AD
EHADB24-3	AD
EHADB27-3	AD
EHADB30-3	AD
EHADB36-3	AD

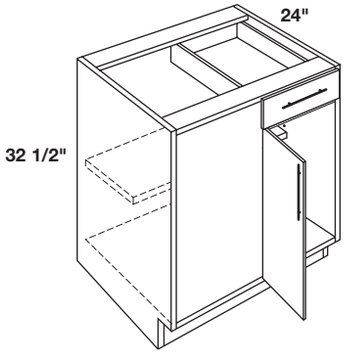

UNIVERSAL ACCESS SINGLE DOOR AND DRAWER BLIND BASE CABINETS

- One half-depth adjustable shelf
- Specify L or R blind location
- See page 3.10 for blind cabinet installation instructions
- Filler must be ordered separately, see page 7.1. Allow 27" to turn corner
- **EHABLB36/39 not available with double wall drawer upgrade**

EHABLB36/39 L or R AD FDS
EHABLB39/42 L or R AD FDS
EHABLB42/45 L or R AD FDS
EHABLB45/48 L or R AD FDS
EHABLB48/51 L or R AD FDS

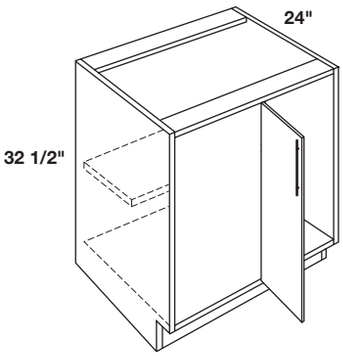

UNIVERSAL ACCESS SINGLE DOOR FULL HEIGHT BLIND BASE CABINETS

- One half-depth adjustable shelf
- Specify L or R blind location
- See page 3.10 for blind cabinet installation instructions
- Filler must be ordered separately, see page 7.1. Allow 27" to turn corner

EHABLB36/39FH L or R AD FDS
EHABLB39/42FH L or R AD FDS
EHABLB42/45FH L or R AD FDS
EHABLB45/48FH L or R AD FDS
EHABLB48/51FH L or R AD FDS

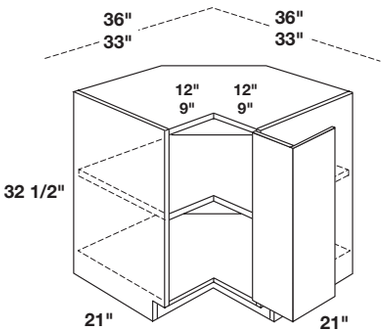

UNIVERSAL ACCESS EASY REACH CORNER BASE CABINETS

- Cabinets come with one full-depth, adjustable shelf
- Requires 36" of wall space on both sides; install 3" off the wall
- **Gentle-Touch (soft-close) hinge not available**
- **Not available in altered depth**

EHABER33 L or R
EHABER36 L or R

Recommend using fillers when installed near appliances that are greater than 25" in depth.

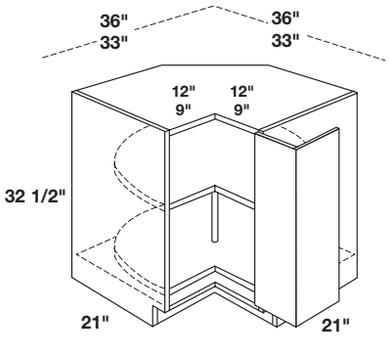

UNIVERSAL ACCESS EASY REACH CORNER BASE CABINETS WITH LAZY SUSAN

- Two high impact 28" diameter white plastic shelves rotate independently
- Requires 36" of wall space on both sides; install 3" off the wall
- **Gentle-Touch (soft-close) hinge not available**

EHABERS33 L or R
EHABERS36 L or R

Recommend using fillers when installed near appliances that are greater than 25" in depth. This unit is NOT designed to be used at the end of a cabinet run.

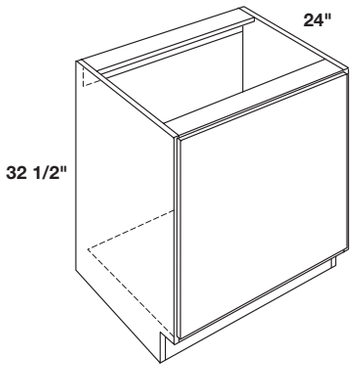

UNIVERSAL ACCESS BASE OVEN CABINETS

- For under counter installation of single oven
- 5/8" thick industrial grade particleboard bottom
- Cabinet comes with full coverage panel
- On-site trimming required based upon specs for oven; use trim kit supplied by appliance manufacturer
- **Base oven cabinets do not come with matching interior**

EHABOC27
EHABOC30

MAXIMUM CUT OUT DIMENSIONS

MODEL	WIDTH MAXIMUM	HEIGHT MAXIMUM
EHABOC27	24.5"	26-3/4"
EHABOC30	27.5"	26-3/4"

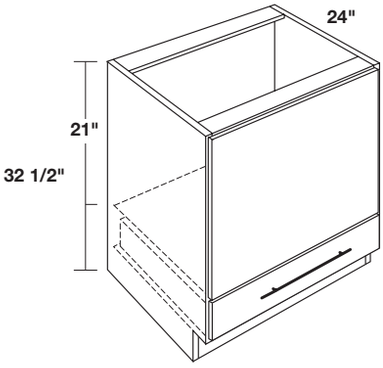

UNIVERSAL ACCESS SINGLE DRAWER MICROWAVE BASE CABINETS

- For under counter installation of microwave
- 5/8" thick industrial grade particleboard bottom
- Cabinet comes with full coverage panel
- Includes one standard drawer
- On-site trimming required based upon specs for microwave; use trim kit supplied by appliance manufacturer
- **Microwave base cabinets do not come with matching interior**

EHABOD27
EHABOD30

MAXIMUM CUT OUT DIMENSIONS

MODEL	WIDTH MAXIMUM	HEIGHT MAXIMUM
EHABOD27	24.5"	19"
EHABOD30	27.5"	19"

NEW

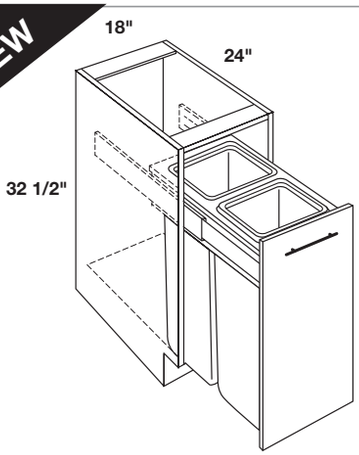

UNIVERSAL ACCESS FULL HEIGHT BASE CABINET WITH FACTORY INSTALLED DOUBLE WASTEBASKETS

- Door is attached to wastebaskets and opens as drawer
- Two 50 qt. removable trash containers
- Full extension slides
- **Not available with soft-close slides**

EHAB18WBFH

UNIVERSAL ACCESS SINK BASE CABINETS

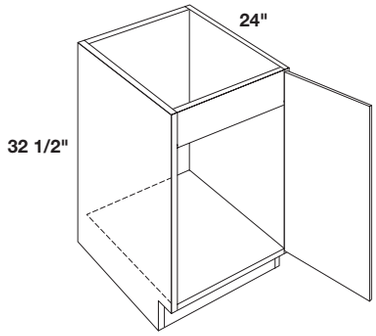

UNIVERSAL ACCESS SINGLE DOOR FULL HEIGHT SINK BASE CABINETS

EHASB18FH L or R AD
EHASB21FH L or R AD
EHASB24FH L or R AD

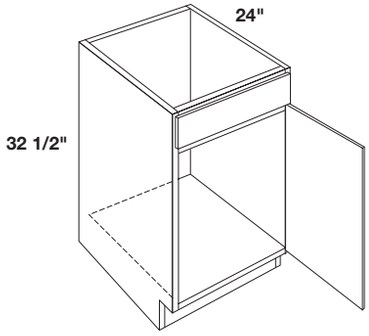

UNIVERSAL ACCESS SINGLE DOOR SINK BASE CABINETS

- Dummy drawer front

EHASB18 L or R AD
EHASB21 L or R AD
EHASB24 L or R AD

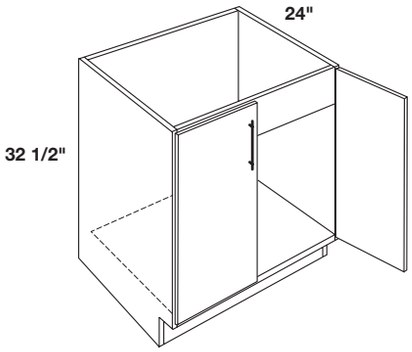

UNIVERSAL ACCESS TWO DOOR FULL HEIGHT SINK BASE CABINETS

EHASB24FH AD
EHASB27FH AD
EHASB30FH AD
EHASB33FH AD
EHASB36FH AD
EHASB39FH AD
EHASB42FH AD
EHASB45FH AD
EHASB48FH AD

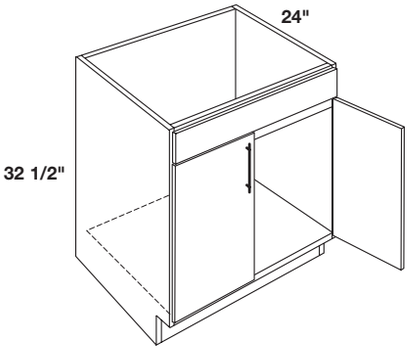

UNIVERSAL ACCESS TWO DOOR SINK BASE CABINETS

- Dummy drawer front

EHASB24 AD
EHASB27 AD
EHASB30 AD
EHASB33 AD
EHASB36 AD
EHASB39 AD
EHASB42 AD
EHASB45 AD
EHASB48 AD

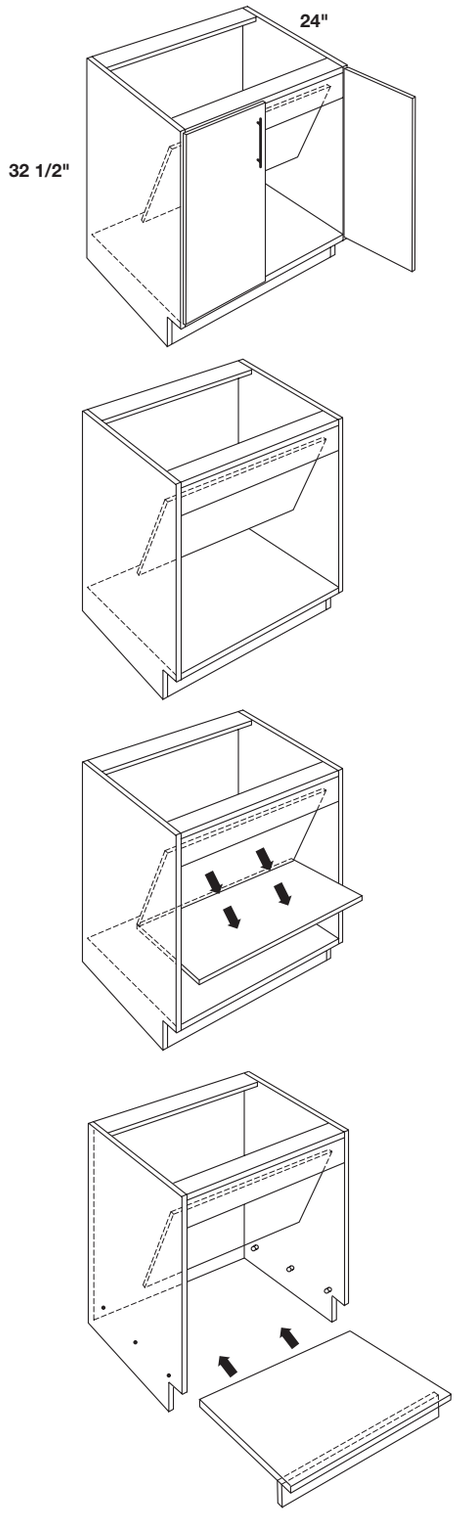

UNIVERSAL ACCESS ADAPTABLE TWO DOOR FULL HEIGHT SINK BASE CABINETS WITH REMOVABLE FRONT

- Matching interior
- Removable plumbing skirt to ease access for plumbing installation and repair
- Hole plugs not provided
- **Altered depth available in 23" and 21" only**

EHASBRB31.5FH AD
EHASBRB33FH AD
EHASBRB36FH AD
EHASBRB39FH AD
EHASBRB42FH AD

HOW TO CONVERT REMOVABLE BOTTOM CABINET INTO AN ADA-COMPLIANT SINK CABINET:

1. Remove the staples that hold the shipping strap along the toe board. This strap holds the end panels together during transportation
2. Remove both doors.
3. Lift the bottom upwards and remove the bottom through the front opening (the bottom sits on six steel pins and is notched to keep it from moving.)
4. Remove the steel pins and hinge base plates from the end panels. The plumbing skirt is designed to be removed. This allows plumber access for installation and repair while maintaining ADA Compliance.

studio full access®

CABINET SERIES

Moldings & Panels

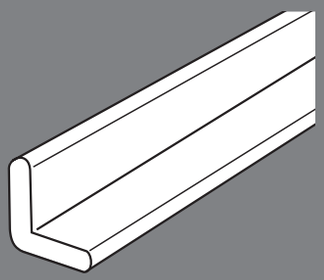

studio full access®

CABINET SERIES

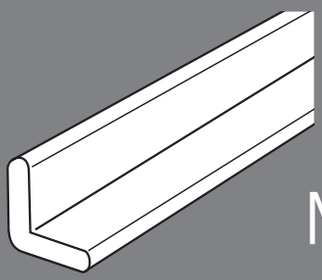

Moldings & Panels

FILLERS

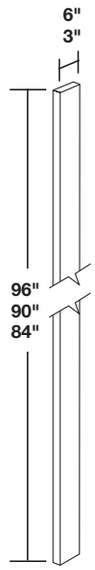

96", 90", and 84" HIGH UTILITY CABINET FILLERS

- TFL: no edgebanding
- Material matches door and drawer front texture and finish pattern

EUF396
EUF390
EUF384

EUF696
EUF690
EUF684

42", 36", and 30" HIGH WALL CABINET FILLERS

- RTF: Top and bottom edges wrapped with RTF material
- TFL: Includes edgebanding on top and bottom
- Material matches door and drawer front texture and finish pattern

EWF330
EWF336
EWF342

EWF630
EWF636
EWF642

BASE CABINET FILLERS

- TFL: Includes edgebanding on top and bottom
- Material matches door and drawer front texture and finish pattern

EBF3
EBF6

PANELS

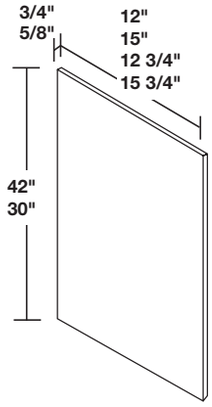

WALL DECORATIVE END PANELS

- For use with wall cabinets
- TFL: Matching edgebanding on 3 edges; panel will be 5/8" thick and either 12 3/4" (EWEP__) or 15 3/4" (EWEP15__) wide
- RTF: Panel will be 3/4" thick and either 12" (EWEP__) or 15" (EWEP15__) wide; white melamine on back
- Front of panel matches door and drawer front texture and finish pattern

42" HIGH
EWEPx42
EWEP15x42

36" HIGH
EWEPx36
EWEP15x36

30" HIGH
EWEP
EWEP15

27" HIGH
EWEPx27
EWEP15x27

24" HIGH
EWEPx24
EWEP15x24

21" HIGH
EWEPx21
EWEP15x21

18" HIGH
EWEPx18
EWEP15x18

15" HIGH
EWEPx15
EWEP15x15

12" HIGH
EWEPx12
EWEP15x12

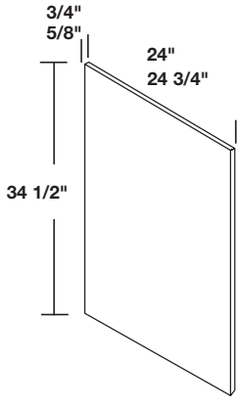

34 1/2" HIGH BASE DECORATIVE END PANEL

- For use with base cabinets
- TFL: Matching edgebanding on one of the 34 1/2" edges; panel will be 5/8" thick and 24 3/4" wide
- RTF: Panel will be 3/4" thick and 24" wide; white melamine on back
- Front of panel matches door and drawer front texture and finish pattern

EBEP

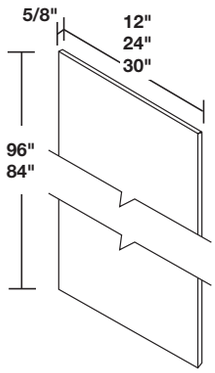

96" AND 84" HIGH UTILITY END PANELS

- For use with utility and refrigerator cabinets
- Matching edgebanding on one of the 96" or 84" edges
- 5/8" thick non-textured cabinet laminate matches cabinet end panels
- ETEP_____ comes finished both sides

ETEP12x96
ETEP24x96
ETEP30x96

ETEP12x84
ETEP24x84
ETEP30x84

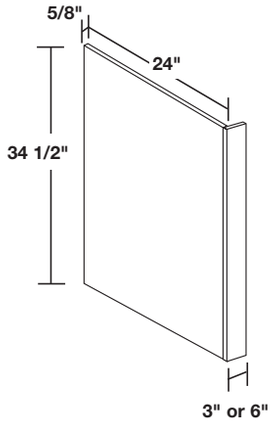

DISHWASHER END PANELS

- 3" or 6" return material matches door and drawer front texture and finish pattern
- Non-textured cabinet laminate end panel graining runs vertically regardless of style ordered

EDWR3
EDWR6

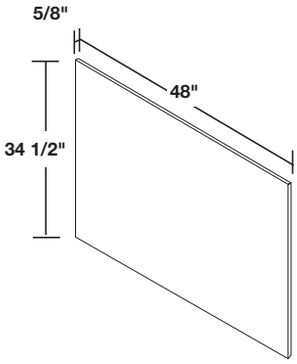

PENINSULA BASE CABINET BACK PANEL

- Non-textured cabinet laminate graining runs vertically regardless of style ordered
- 5/8" thick
- Edgebanded on the 34 1/2" edges
- One side finished unless ordered with matching interior

EPBP MI

PANELS continued

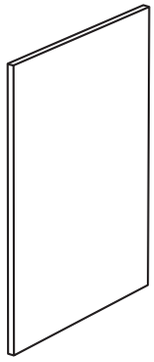

DOOR AS PANEL

- Hinges must be orderd separately; specify hinge boring as left, right, or none
- Door should be ordered based upon cabinet size
- Refer to page 9.12 for door size formulas
- TFL: Edgebanding on all 4 sides
- RTF: White melamine on back
- Material matches door and drawer front texture and finish pattern
- **NOTE: Found under accessories in 20/20**

EDOOR.ONLY

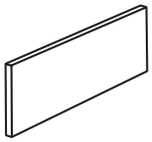

DRAWER FRONT AS PANEL

- Drawer front should be ordered based upon cabinet size
- Refer to page 9.12 for drawer size formulas
- TFL: Edgebanding on all 4 sides
- Material matches door and drawer front texture and finish pattern
- **NOTE: Found under accessories in 20/20**

EDWRFRONT.ONLY

VALANCES

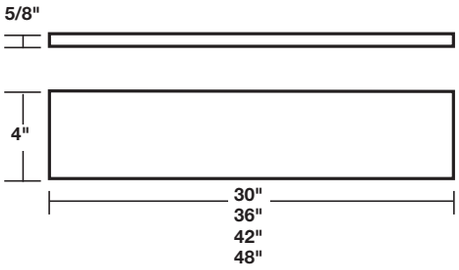

STRAIGHT VALANCES

- Material matches door and drawer front texture and finish pattern
- Trimmable
- Finish pattern runs parallel with the length of the valance
- RTF: Wrapped on one long edge
- TFL: Edgebanding on one long edge

ESTVAL30
ESTVAL36
ESTVAL42
ESTVAL48

MOLDINGS

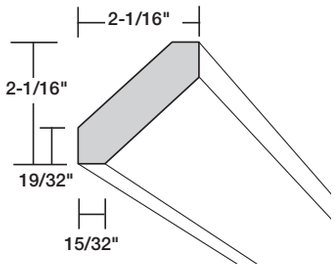

SHAKER CROWN MOLDING

- Molding is 8' long
- ESHC8L/10 includes 10 pieces per carton

ESHC8L
ESHC8L/10

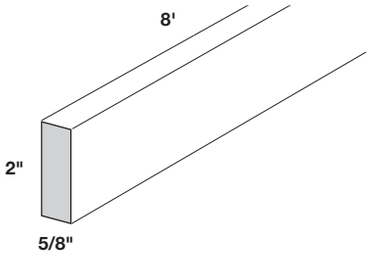

LIGHT RAIL

- Non-textured cabinet laminate thermally fused to an MDF core
- 5/8" x 2" x 8' long
- Finish pattern runs parallel to the length of the light rail
- Edgebanded on one long edge

ELR2x96

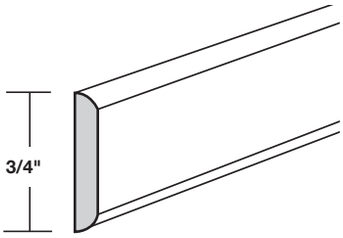

BATTEN MOLDING

- Non-textured cabinet laminate thermally fused to an MDF core
- Molding is 1/4" x 3/4" x 8' long
- Finish pattern runs parallel to the length of the molding

EBAT1P

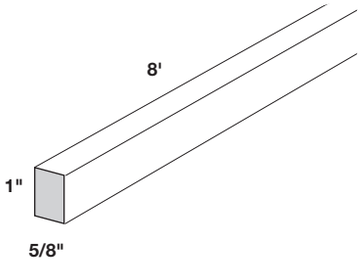

SOFFIT SPACER

- Non-textured cabinet laminate thermally fused to an MDF core
- 5/8" x 1" x 8' long
- Finish pattern runs parallel to the length of the molding
- Offered as a 10 pack

ESCM1L/10

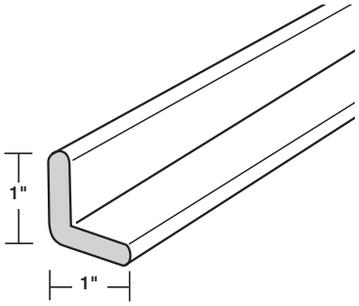

LARGE OUTSIDE CORNER MOLDING

- Molding is 8' long
- ELOCM1L/30 includes 30 pieces per carton

ELOCM1L
ELOCM1L/30

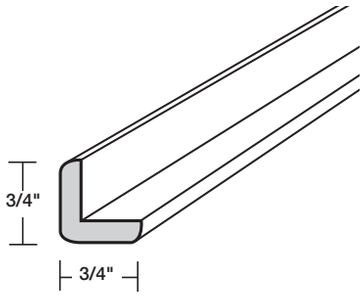

OUTSIDE CORNER MOLDING

- Molding is 8' long
- EOCM1L/50 includes 50 pieces per carton

EOCM1L
EOCM1L/50

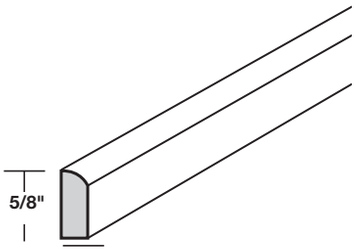

5/8" SCRIBE

- Non-textured cabinet laminate thermally fused to an MDF core
- 1/4" x 5/8" x 8' long
- Finish pattern runs parallel to the length of the molding

ESCM0P

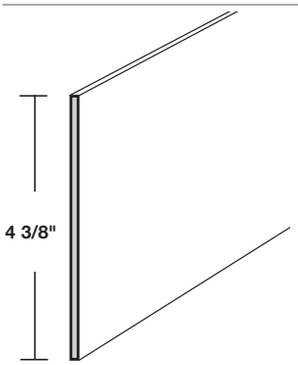

TOE KICK SKIN

- Skin is 1/8" thick x 4 3/8" high x 8' long non-textured cabinet laminate
- Finish pattern runs parallel to the length of the toe kick skin

ETKS8L

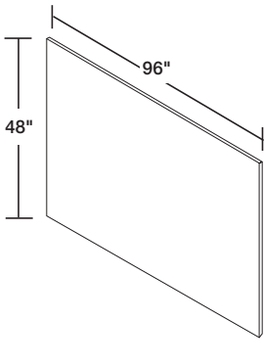

FINISHED SKIN

- 48" x 96" long finished skin

EFS4x8

studio full access®

CABINET SERIES

Touch-Up Materials, Parts, & Hardware

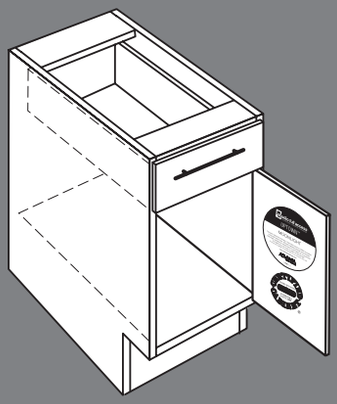

studio full access®

CABINET SERIES

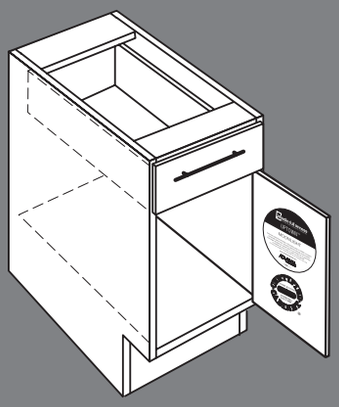

Touch-Up Materials, Parts, & Hardware

TOUCH-UP MATERIALS

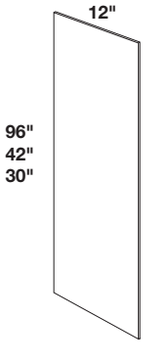

10 MIL PEEL-N-STICK BACKER FOR 12" DEEP END PANELS

- 10 mil thick non-textured laminate
- Custom trimming on site may be required

EPLYSTICKW30
EPLYSTICKW42
EPLYSTICKW96

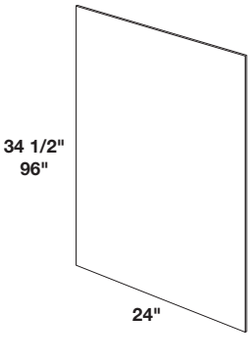

10 MIL PEEL-N-STICK BACKER FOR 24" DEEP END PANELS

- 10 mil thick non-textured laminate
- Custom trimming on site may be required

EPLYSTICKBEP
EPLYSTICKB96

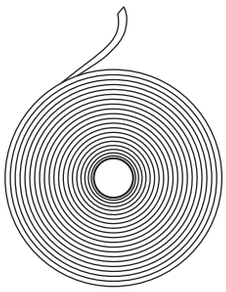

PEEL-N-STICK EDGEBANDING

- 3/4" wide for 5/8" application
- Specify length in feet

EDGEBANDPS

TOUCH-UP KITS

- Includes touch-up marker and wax filler stick for TFL finishes

TFL
ETUKITASH
ETUKITBRWSTN
ETUKITGRPHITE
ETUKITMNLGHT
ETUKITWINBARK

RTF
ETUKITEXWHITE
ETUKITFSHNGREY

PAINT
ETUKITSLATE

SAMPLES

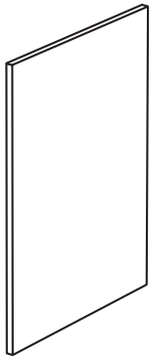

DOOR SAMPLE

- 10" w x 15" h
- TFL doors are edgebanded on all 4 sides

ESMSAMPLEDOOR

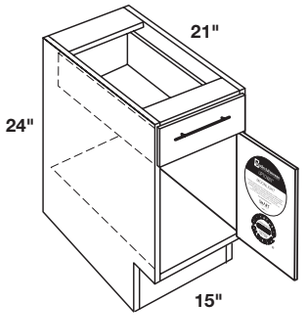

MINI BASE SAMPLES

- Can be ordered with upgrades
- KCMA Sticker and Door Style label applied

ESMB15 L or R

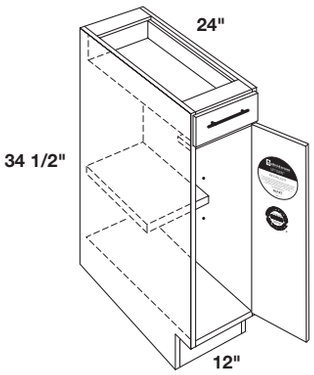

FULL SIZE BASE SAMPLES

- 12" base cabinet with toe kick
- Can be ordered with upgrades
- KCMA Sticker and Door Style label applied

ESMSAMPLEB12 L or R

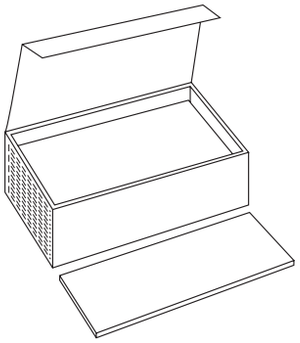

FINISH SAMPLE SET

- Each sample is 10" w x 5" h and edgebanded on all 4 sides
- Includes all 8 Studio Full Access finish options

EWMSAMPLESET

RTF SAMPLE SET

- Each sample is 3" w x 4" h
- Includes all Studio Full Access RTF finish options

ESMRTFSAMPLESET

PARTS

Part #	Description	List
DRAWER GUIDE & PARTS		
EZARGGUIDESET12	12" D Zargen drawer guide set	$ 30.00
ETNDMBXABGD550M	Tanden box 550mm cab profile set	$ 53.00
EDYNPROSET24	Euro 24" D Dynapro Guide Set	$ 117.00
EDYNPROSET21	Euro 21" D Dynapro Guide Set	$ 117.00
EDBLWLDRWKIT24	Dbl Wall Dwr 24	$ 100.00
EDBLWLDRWKIT21	Dbl Wall Dwr 21	$ 100.00
EZARGGUIDESET18	18" D Zargen drawer guide set	$ 30.00
EZARGGUIDESET21	21" D Zargen drawer guide set	$ 30.00
EZARGGUIDESET24	24" D Zargen drawer guide set	$ 30.00
ESOFTCLOSEKIT	Blum soft-close drawer damper	$ 37.00
HINGES		
EBER36DR-DR	Door hinge for EBER36	$ 14.00
EBER36DR-FRM	Frame hinge for EBER36	$ 14.00
ENEXISHINGE	Standard Hinge	$ 3.00
ENEXISHINGEPLAT	Standard Hinge Plate	$ 1.00
ESFTCLS-BLNDHNG	Blind cabinet hinge	$ 35.00
ESOFTCLOSECWHNG	BLUM soft-close corner wall hinge	$ 11.00
ESOFTCLOSEHINGE	Blum soft-close hinge	$ 11.00
ESFTCLSEHGEPLAT	Blum soft-close hinge plate	$ 2.00
EVLHINGE	Vertical lift hinge	$ 83.00
EVLHINGEPLATE	Vertical lift hinge plate	$ 32.00
EVLHINGESET	Vertical lift hinge and plate	$ 109.00
CLIPS AND PADS		
EBLSHELFCLIP	3/4" base cabinet shelf support left for plumbing skirt	$ 0.51
EBRSHELFCLIP	3/4" base cabinet shelf support right for plumbing skirt	$ 0.51
EWSHELFCLIP	3/4" wall cabinet shelf kit	$ 0.51
EBUMPERPADCLR	Clear bumper pads	$ 0.20
SHELVES		
EBER33SHELFKIT	Lazy Susan kit for EBERS33	$ 62.00
EBER36SHELFKIT	Lazy Susan kit for EBERS36	$ 62.00
EDGEBANDING		
EDGEBANDPS	Peel-n-Stick Edge band	$ 4.00
BACK AND FLOOR MATERIAL		
EBACKS4X5W	48X60X118 White Back	$ 67.00
EFL31.5	30.21X23.20 Removable Bottom	$ 75.00
EFL33	31.71X23.20 Removable Bottom	$ 75.00
EFL36	34.71X23.20 Removable Bottom	$ 75.00
EFL39	37.71X23.20 Removable Bottom	$ 75.00
EFL42	40.71X23.20 Removable Bottom	$ 75.00
ACCESSORIES		
ERVWC1835QT	Double 35 Quart Euro Top Mount Waste Basket	$ 400.00
4WCTM1850-419FL	Double 50 Quart Euro Top Mount Waste Basket	$ 535.00

HARDWARE

All hardware is shipped with cabinet orders and is packed with the appropriate amount of 8/32" x 1" screws.

E146SN
146mm Overall Length Cabinet Bar Pull
Holes are 96mm center-to-center

E154SS
154mm Overall Length
Hollow Stainless Steel Cabinet Bar Pull
Holes are 96mm center-to-center

E178SN
178mm Overall Length Cabinet Bar Pull
Holes are 96mm center-to-center

E204SS
204mm Overall Length
Hollow Stainless Steel Cabinet Bar Pull
Holes are 96mm center-to-center

E3980SN
1-1/4" Diameter Cabinet Knob

E40SN
40mm Overall T Cabinet Knob

E5319SN
14-1/8" Overall Length Cabinet Bar Pull
Holes are 96mm center-to-center

E635-32PC
2-1/4" Overall Length Cabinet Pull
Holes are 32mm center-to-center

E635-32SN
2-1/4" Overall Length Cabinet Pull
Holes are 32mm center-to-center

E635-96PC
4-3/4" Overall Length Cabinet Pull
Holes are 96mm center-to-center

E635-96SN
4-3/4" Overall Length Cabinet Pull
Holes are 96mm center-to-center

E635-160PC
7-1/2" Overall Length Cabinet Pull
Holes are 160mm center-to-center

E635-160SN
7-1/2" Overall Length Cabinet Pull
Holes are 160mm center-to-center

E8004-SN
4-7/8" Overall Length Cabinet Pull
Holes are 96mm center-to-center

TAB PULL HARDWARE DISCLOSURE

Studio Full Access (SFA) Construction does not support the use of the "tab" or "edge" pull hardware. Due to the tight door and drawer tolerances of the SFA design, use of this type of hardware can cause rubbing and/or wearing on the edges of the cabinet doors and drawer fronts. **acpi is not responsible for any damage that occurs as a result of using this hardware on Studio Full Access Cabinetry.**

Back side of 8.5 does not print

studio full access®
CABINET SERIES

Index & Appendices

studio full access®

CABINET SERIES

Index & Appendices

INDEX

NOMENCLATURE	ITEM	PAGE #
EALDCG	Vetro Aluminum Doors for Single or Two Door Wall Cabinets	2.15
EALDCGC	Vetro Aluminum Doors for Corner Wall Cabinets	2.15
EB	Base Cabinets	3.1, 3.2
EB_FH	Full Height Base Cabinets	3.1, 3.2
EB_WBFH	Full Height Base Cabinet with Wastebaskets	3.5
EBAT	Batten Molding	7.5
EBC	Bookcases	2.17
EBEP	Base End Panel	7.2
EBER	Easy Reach Corner Base Cabinet	3.4
EBERS	Easy Reach Corner Base Cabinet with Lazy Susan	3.4
EBF	Base Cabinet Fillers	7.1
EBLB	Blind Base Cabinets	3.4
EBLB_FH	Full Height Door Blind Base Cabinets	3.4
EBLW	Blind Wall Cabinets	2.8
EBLWL	Blind Long Wall Cabinets	2.9
EBOC	Base Oven Cabinets	3.5
EBOD	Microwave Base Cabinets	3.5
EBWC	Base Wine Cabinet	3.10
ECLU	Wardrobe Cabinets	4.1
ECLD	Wardrobe Cabinets with Drawers (1, 2, or 3)	4.2, 4.3, 4.4, 4.5
ECLOSETROD	Closet Rod Kits	4.5
ECLR	Wardrobe Cabinets with Closet Rod	4.1
ECLRD	Wardrobe Cabinets with Drawers (1, 2, or 3) and Closet Rod	4.2, 4.3, 4.4, 4.5
ECW	Single Door Corner Wall Cabinets	2.11
ECWL	Single Door Corner Long Wall Cabinets	2.11
EDB-3	Three Drawer Base Cabinets	3.3
EDB-4	Four Drawer Base Cabinets	3.3
EDD	Desk Cabinet Drawer	3.10
EDGEBANDPS	Peel-N-Stick Edgebanding	8.1
EDOOR.ONLY	Door as Panel	7.4
EDWR	Dishwasher End Panel	7.3
EDWRFRONT.ONLY	Drawer Front as Panel	7.4
EFS	Finished Skin	7.6
EFV_FH	Full Height Door Floating Vanity Base Cabinets	5.5
EFVDB-2	Floating Vanity Drawer Base Cabinets	5.5
EFVS_FH	Full Height Door Floating Vanity Sink Base Cabinets	5.6
EFVSDBU	Floating Vanity Drawer Sink Base Cabinets	5.6

INDEX continued

NOMENCLATURE	ITEM	PAGE #
EHAB	Universal Access Base Cabinets	6.1, 6.2
EHAB_FH	Full Height Door Universal Access Base Cabinets	6.1, 6.2
EHAB_WBFH	Universal Access Full Height Base Cabinet with Wastebaskets	6.6
EHABER	Universal Access Easy Reach Corner Base Cabinet	6.4
EHABERS	Universal Access Easy Reach Corner Base Cabinet with Lazy Susan	6.5
EHABLB	Universal Access Blind Base Cabinets	6.4
EHABLB_FH	Universal Access Full Height Door Blind Base Cabinets	6.4
EHABOC	Universal Access Base Oven Cabinets	6.6
EHABOD	Universal Access Microwave Base Cabinets	6.6
EHADB-3	Universal Access Three Drawer Base Cabinets	6.3
EHASB	Universal Access Sink Base Cabinets	6.7
EHASB_FH	Universal Access Full Height Door Sink Base Cabinets	6.7
EHASBRB_FH	Universal Access Adaptable Full Height Door Sink Base Cabinets with Removable Front	6.8
EHSK	Heat Shield Kits	4.11
EHWSB_PS	Hanging Wall Sink Base Cabinets with Plumbing Skirt	3.9
EIUC	Inverted Utitlity Cabinets	4.8, 4.9
EIVLC	Inverted Vanity Linen Cabinets	5.8
ELOCM	Large Outside Corner Molding	7.5
ELR	Light Rail Molding	7.5
EMC	Microwave Wall Cabinets with Extended Bottom	2.14
EOCM	Outside Corner Molding	7.6
EOV_	Oven Cabinets with Drawers (1 or 3)	4.10
EPBP	Peninsula Base Cabinet Back Panel	7.3
EPLYSTICKW	Peel-N-Stick Backer for Wall Cabinet End Panels	8.1
EPLYSTICKB	Peel-N-Stick Backer for Base Cabinet End Panels	8.1
ESB	Sink Base Cabinets	3.6
ESB_FH	Full Height Door Sink Base Cabinets	3.6
ESBRB	Sink Base Cabinet with Removable Front	3.8
ESBRB_FH	Full Height Door Sink Base Cabinet with Removable Front	3.7
ESCM_L	Soffit Spacer Molding	7.5
ESCM_P	5/8" Scribe Molding	7.6
ESHC	Shaker Crown Molding	7.5
ESTVAL	Valances	7.4
EST	Base Cabinet Roll-Out Shelf Tray Kits	3.10
EST_UC	Utility Cabinet Roll-Out Shelf Tray Kits	4.13

NOMENCLATURE	ITEM	PAGE #
ETEP	Utility End Panels	7.3
ETKS	Toe Kick Molding	7.6
ETUKIT	Touch-Up Kits	8.1
EUC	Utility Cabinets	4.6, 4.7
EUCS	Utility Cabinet Loose Shelves	4.12
EUF	Utility Cabinet Fillers	7.1
EV	Vanity Sink Base Cabinets	5.1
EV_FH	Full Height Door Vanity Sink Base Cabinets	5.1
EV_H	34-1/2" Vanity Sink Base Cabinets	5.1
EV_HFH	34-1/2" Full Height Vanity Sink Base Cabinets	5.1
EVB	Single Drawer Vanity Sink Base Cabinets	5.2
EVB_H	34-1/2" Single Drawer Vanity Sink Base Cabinets	5.2
EVCDB	Door and Drawer Combo Vanity Sink Base Cabinets	5.4
EVCDB_H	34-1/2" Door and Drawer Combo Vanity Sink Base Cabinets	5.4
EVDB-3	Three Drawer Vanity Base Cabinets	5.3
EVDB-4	Four Drawer Vanity Base Cabinets	5.3
EVDB_H-3	34-1/2" Three Drawer Vanity Base Cabinets	5.3
EVDB_H-4	34-1/2" Four Drawer Vanity Base Cabinets	5.3
EVLC	Vanity Linen Cabinet	5.8
EVSDBU	32-1/2" Vanity Drawer Sink Base Cabinets	5.2
EVSDBU_H	34-1/2" Vanity Drawer Sink Base Cabinets	5.2
EVW	Vanity Wall Cabinet	5.7
EW	Wall Cabinets	2.1, 2.3, 2.5
EW	Long Wall Cabinets	2.2, 2.4, 2.5
EW	Refrigerator Wall Cabinets (24" Deep)	2.12
EW	Refrigerator Long Wall Cabinets (24" Deep)	2.13
EWC	Wine Cube Wall Cabinets	2.16
EWEP	Wall Decorative End Panel	7.2
EWER	Easy Reach Square Corner Wall Cabinets	2.10
EWERL	Easy Reach Square Corner Long Wall Cabinets	2.10
EWF	Wall Cabinet Fillers	7.1
EWLVL	Vertical Lift-Up Long Wall Cabinets (12" and 24" Deep)	2.7
EWOC	Open Wall Cabinets	2.16
EWVL	Vertical Lift-Up Wall Cabinets (12" and 24" Deep)	2.6

NOTES

CARING FOR YOUR NEW STUDIO FULL ACCESS CABINET PRODUCTS

Congratulations! We know you have a choice in selecting kitchen cabinetry and appreciate your interest in our brand. With proper care, your Studio Full Access products will deliver years of beauty, enjoyment, and convenience.

This Studio Full Access Care Guide will assist you in choosing the correct products to protect your cabinets from normal wear and to repair any imperfections if they should occur.

- Clean cabinets as needed using a lint-free cloth dampened with warm water. Dry well.
- Wipe up spills, splatters and water spots as they occur, keeping cabinets and countertop surfaces dry.
- Give special attention to areas near the sink and dishwasher that come in contact with moisture.

CLEANING PRODUCTS TO AVOID

- **Do not** use abrasive cleaners, scouring pads, or powdered cleaners. These materials may penetrate the cabinet finish allowing moisture to enter and cause deterioration. Do not use harsh chemicals such as ammonia and bleach.
- **Do not** use solvent- or petroleum-based products such as nail polish removers or paint thinners.
- **Do not** wax your cabinets. Over time, wax may build up and cause a discolored appearance.
- **Do not** use pre-moistened dusting sheets or aerosol products specified for dusting.

REMEDIES FOR COMMON KITCHEN ACCIDENTS

Most problems can be prevented by wiping up any spills as soon as they occur. Follow these first aid suggestions for common household accidents. When removing a spot begin at the outer edge and work toward the middle to prevent the spot from spreading.

Food Spots/Water Spots
Clean cabinets as needed with a mild detergent or with soap and water (use sparingly) and dry well using a lint free cloth for both washing and drying.

Greasy Spots
Rub grease, lipstick, crayon, or oil with a damp cloth.

Chewing Gum/Candle Wax
Apply a plastic bag filled with ice on top of the deposit until it is brittle enough to crumble off.

Minor Scratches, Nicks, and Dents
Studio Full Access offers a **Cabinetry Care Kit** to help you keep your cabinet products looking like new. Most scratches, nicks, and dents can be repaired using this kit. The Cabinetry Care Kit includes (1) a touch-up marker to re-stain small scratches and (2) a putty stick to fill nail holes, minor nicks, and dents.

Both of these items can be ordered through the Studio Full Access customer service department.

LIMITED 1-YEAR WARRANTY

For cabinetry purchased on or after April 1, 2016.
ACProducts, Inc. (ACPI) warrants to the original consumer purchaser that our Studio Full Access Cabinets will be free from defects in material and workmanship under normal use for a period of one (1) year from the date of purchase (except where required by law to be two (2) years) or as per written agreement. This warranty is extended to the original purchasing consumer only for use of the product within the United States and is not transferrable. No changes or modifications can be made to this warranty except by an officer of ACProducts, Inc.

WARRANTY COVERAGE

Limited 1-Year Warranty on Cabinets (except where required by law to be two (2) years) to the original purchasing consumer from date of original purchase or as per written agreement that the cabinets will be free from defects in material and workmanship under normal use.

WARRANTY LIMITATIONS AND EXCLUSIONS

- This Warranty does not apply to (i) damage caused by improper installation, (ii) other product used or installed in connection with the cabinets including, but not limited to, appliances, countertops, or plumbing fixtures (including the costs to remove and reinstall such other product), (iii) product damage, loss, or theft either after delivery for material only jobs or after installation for installed jobs, or (iv) damage caused by misuse, abuse, neglect, accident, alteration, improper use, exposure to moisture or extreme temperatures, failure to maintain, acts of God, or normal wear and tear.
- Naturally occurring wood characteristics including, but not limited to, variations in color, grain pattern, mineral streaks and knots are not considered defects. Color variations may also be affected by age, character of cabinets, and exposure to UV light, sunlight, smoke, household cleaners, and other environmental conditions. As such, new and/or replacement cabinets may not match display samples and/or existing cabinets. Any such variations and changes to Studio Full Access Cabinet products, whether present during production or which develop over time, are not considered quality defects and are not covered by this warranty.
- Painted finishes have unique characteristics that differ from standard wood finishes. Wood of all species is subject to the humidity and temperature of its environment and may expand or contract due to changes in weather, temperature, or climate. Due to these normal shifts in the environment, painted wood cabinetry may develop hairline cracks, peeling, or separation of seam lines. On select hardwoods and veneers, joints, seams, and some natural characteristics of the wood (including, but not limited to, grain patterns, knots, and mineral streaks) will remain visible through painted finishes. As painted cabinet products age, the finish may mellow or discolor slightly. The degree of change to the original finish color is affected by the products' exposure to natural and artificial light. These normal variations are not considered quality defects and are not covered by this warranty.

WARRANTY PERFORMANCE

In the event of a manufacturing defect within the terms and conditions set forth herein, ACPI will repair or replace the product, at ACPI's sole option, without charge. Such repair or replacement is contingent upon the current product offerings within the ACPI product line at the time of the warranty claim. If the affected product is no longer available, ACPI reserves the right to (i) replace the affected component with a new component of the same style, or (ii) replace the affected component and any other component within the total product to achieve a uniform appearance with a similar and comparable product style and quality as the original product. Due to changes that occur during the wood's natural aging process, ACPI cannot guarantee that replacements will exactly match the finish and appearance of the remaining components in the original product. ACPI will not provide or pay for the cost of (i) removal of defective product, (ii) transportation of defective, repaired, or replaced product, or (iii) installation of repaired or replaced product. Repaired or replaced product shall be warranted for a period equal to the remainder of the original Limited Warranty on the original product or for ninety days, whichever is longer.

WARRANTY DISCLAIMER

THIS LIMITED WARRANTY SETS OUT THE FULL EXTENT OF ACPI'S RESPONSIBILITIES, AND THE EXCLUSIVE REMEDY REGARDING THE PRODUCTS. ALL IMPLIED WARRANTIES, INCLUDING WITHOUT LIMITATION, IMPLIED WARRANTIES OF MERCHANTABILITY AND FITNESS FOR A PARTICULAR PURPOSE, ARE LIMITED TO THE DURATION OF THIS LIMITED WARRANTY. IN NO EVENT SHALL ACPI BE LIABLE FOR DAMAGES IN EXCESS OF THE PURCHASE PRICE OF THE PRODUCT OR FOR, WITHOUT LIMITATION, COMMERCIAL LOSS OF ANY SORT; LOSS OF USE, TIME, DATA, REPUTATION, OPPORTUNITY, GOODWILL, PROFITS OR SAVINGS; INCONVENIENCE; INCIDENTAL, SPECIAL, CONSEQUENTIAL OR PUNITIVE DAMAGES; OR DAMAGES ARISING FROM THE USE OR INABILITY TO USE THE PRODUCT. SOME STATES AND JURISDICTIONS DO NOT ALLOW LIMITATIONS ON HOW LONG AN IMPLIED WARRANTY LASTS, OR THE DISCLAIMER OR LIMITATION OF INCIDENTAL OR CONSEQUENTIAL DAMAGES, SO THE ABOVE LIMITATIONS AND DISCLAIMERS MAY NOT APPLY TO YOU. All disputes with ACPI arising in any way from this Limited Warranty or the sale, condition or performance of the Products shall be resolved exclusively through final and binding arbitration, and not by a court or jury.

SEVERABILITY

If any portion of this Limited Warranty is held to be illegal or unenforceable, such partial illegality or unenforceability shall not affect the enforceability of the remainder of the Limited Warranty.

CLAIMS

All claims must be submitted in writing and must specify the defects present in the cabinets and accessories. To initiate a claim for defective cabinets and accessories contact your builder, dealer, distributor or contractor who installed and sold the product.

If that party is unknown or you have difficulty obtaining assistance, contact:

ACProducts, Inc., Customer Service Dept., 3551 Plano Parkway, Suite 200, The Colony, Texas 75056

After ACPI has had an opportunity to inspect the cabinets and accessories, they will, at their discretion either replace defective cabinets and accessories or repair any defects in the cabinets and accessories.

For warranty information on cabinetry purchased between November 1, 2012 and March 31, 2016, please visit www.studiofullaccess.com/warranties.

©2016 ACPI All rights reserved.

TERMS & CONDITIONS FOR ALL SALES OF GOODS

1. **Terms and Conditions of Sale.** This Agreement shall cover all materials delivered to Purchaser, by Seller, at Purchaser's request, whether specifically itemized herein or not. If not itemized herein such materials shall be invoiced to Purchaser at Seller's prevailing price at time of delivery. Any receipt signed by any watchman or employee of Purchaser, owner, general contractor, carpenter contractor, or any other authorized agent shall be sufficient evidence of delivery. All orders are subject to the terms and conditions set forth in this Agreement and Seller's warranty in effect as of the date of delivery.
2. **Warranty Summary.** Seller warrants that the products delivered pursuant to this Agreement will be free from defects in material and workmanship at the time of delivery or, if installation is included, upon installation. **SELLER SPECIFICALLY DISCLAIMS ALL OTHER EXPRESSED OR IMPLIED WARRANTIES, INCLUDING THE IMPLIED WARRANTIES OF MERCHANTABILITY OR FITNESS FOR A PARTICULAR PURPOSE.** No affirmation of fact or promise made by Seller, its agents or employees shall constitute a warranty. Seller's obligation with respect to the products sold herein shall be limited to furnishing repair or replacement materials for factory defective materials at ACPI's sole option or reinstallation if applicable. Under no circumstances shall any back charges be rendered by Purchaser without Seller's prior written consent.
3. **Nonconforming Shipments.** Any claim for defective goods, errors, transit damages or shortages shall be presented in writing by Purchaser to Seller within five (5) days from receipt of goods by Purchaser, but no claim shall be made by Purchaser for incidental, indirect, special, or consequential damages. Seller is not responsible for damage after (i) delivery for material only jobs or (ii) installation for installed jobs. Defective product will be handled in accordance with Seller's Standard Limited Warranty. For further information on ACPI's Warranty, see the brand's official website for the products purchased.
4. **Storage Fee.** All orders must be picked up or received by Purchaser (if Seller is delivering the order) within thirty (30) days from the date Seller provides notice to Purchaser that the order is at the delivery point. Seller will apply a $20.00 per day storage fee to Purchaser's account for any order not picked up or received within the 30-day period, and the order will not be released until such storage fee is paid.
5. **Undelivered Orders.** Orders left at the delivery point, or not accepted for delivery, for more than 60 days after notice to Purchaser that the order is available, will be cancelled and Purchaser's deposit for Cash Sales will be retained as liquidated damages. Credit Purchasers will be invoiced and liable for an amount equal to 50% of the total order as liquidated damages.
6. **Returns. THERE IS NO CANCELLATION, RETURN OR REFUNDS ON ANY SPECIAL/NON-STOCK ORDERS.** Returns are permitted on stock items that are not damaged and have not been previously installed, and a restocking and handling fee of 25% of the total order will be charged. The product, including the original carton, must be in good condition and accompanied by the sales receipt. Returns must be received by Seller within 14 days of purchase. All transportation costs for returned goods must be paid by Purchaser. On permitted returns, a refund check will be issued within 120 days. There are no cash refunds.
7. **Financial Stability.** If, at any time before shipment, the financial responsibility of Purchaser becomes impaired or unsatisfactory to Seller, in Seller's sole judgment, cash payment or satisfactory security or assurances other than those herein provided may be required by Seller.
8. **Default.** For credit sales, Purchaser agrees that delivery of product under this Agreement is subject to such credit limit placed upon Purchaser's account by Seller's Credit Department. Failure of Purchaser, even after making partial payment on account in accordance herein, to perform any of its obligations under this Agreement shall give Seller the option, upon notice to Purchaser, to suspend shipments or to cancel this Agreement or that portion of it as may remain unexecuted, without prejudice to any other rights or remedies of Seller.
9. **Insurance.** Upon execution of this Agreement and for the duration of the warranty period, Seller shall maintain insurance in accordance with following limits: Commercial General Liability $1,000,000 each occurrence, $2,000,000 general aggregate, and $2,000,000 products/completed operations; Automobile Liability $1,000,000 combined single limit; Umbrella Liability $2,000,000 each occurrence and in the aggregate; Worker's Compensation and Employer's Liability $1,000,000 each accident, each employee, and policy limit.

   Upon Purchaser's written request, Seller shall provide a Certificate of Insurance for the above-mentioned limits. Purchaser and owner (if applicable) may be listed as additional insureds on the General Liability policy only. If endorsement for ongoing operations ISO Form CG2010 (4/13) or endorsement for completed operations ISO Form CG2037 (4/13) are required by Purchaser, such endorsement(s) will be issued in blanket form only. In no event shall limits per project, waiver of subrogation endorsements, umbrella amounts exceeding those set forth above, or primary and noncontributory endorsements apply to this Agreement.
10. **Indemnity; Limitation of Liability.** Purchaser shall indemnify, defend and hold harmless Seller, including its directors, officers, agents and employees, from all claims, losses, damages, expenses (including reasonable attorneys' fees and court costs), and liabilities for injury to or death of any person, or for loss or damage to any real or tangible personal property arising out of the acts or omissions of Purchaser under this Agreement. **IN NO EVENT SHALL SELLER BE LIABLE FOR ANY INCIDENTAL, INDIRECT, SPECIAL OR CONSEQUENTIAL DAMAGES WHETHER OR NOT ADVISED OF THE POSSIBILITY OF SUCH DAMAGES. FURTHER, SELLER'S TOTAL AGGREGATE LIABILITY FOR DAMAGES UNDER OR IN CONNECTION WITH THIS AGREEMENT, REGARDLESS OF THE FORM OF THE ACTION OR THE THEORY OF RECOVERY, SHALL NOT EXCEED THE PRICE PAID BY PURCHASER UNDER THIS AGREEMENT.**

acpi

11. **Force Majeure.** Seller shall not be responsible for contingencies beyond its control, such as fire, government seizure or control, acts of God, strikes, factory or labor conditions, or any other unfavorable causes that may or shall prevent shipment at the time or times provided for herein. Quoted delivery dates are Seller's best estimate based on current schedules. Incremental or additional costs incurred by Seller, as a result of Purchaser's alteration of the delivery schedule, will be borne by Purchaser.
12. **Offset.** Purchaser agrees to (i) waive any right to offset, whether under this Agreement or under applicable law or otherwise, any amount owed by Seller to Purchaser against any amount then owed or in the future to be owed by Purchaser to Seller and (ii) pay to Seller the full amount owed to Seller in accordance with the terms of this Agreement. For the avoidance of doubt, Purchaser does not waive any substantive claim (other than with respect to its right to offset as described in the preceding sentence) that it may have against Seller.
13. **Legal Expenses and Collection Costs.** Purchaser shall be liable for all reasonable costs of collection and statutory attorney's fees incurred by Seller by reason of Purchaser's failure to pay on account when due.
14. **Waiver.** Waiver by Seller of any default by Purchaser shall not be deemed a waiver by Seller of any default by Purchaser which may thereafter occur.
15. **Termination.** This Agreement may be terminated by Purchaser only when approved in writing by a duly authorized officer or agent of Seller. In the event of termination, Seller will take immediate steps to mitigate termination costs to Purchaser, but Purchaser shall reimburse Seller for the costs of all labor, overhead and material costs and other commitments made by Seller in reliance upon this Agreement. Insolvency of Purchaser, the filing of a petition in bankruptcy or the commencement of any insolvency or receivership proceeding shall be deemed a termination by Purchaser.
16. **Security Interest.** Seller retains a security interest in the materials and product ordered herein until payment in full has been received.
17. **Ownership of Materials.** Designs, processes, drawings, specifications, reports, photographs, data and other technical or proprietary information relating to this order shall remain the property of Seller, and Purchaser agrees that it will not use any of such items or information therein for the production or procurement from any other source of articles furnished in connection with this order, nor reproduce or otherwise appropriate the same without the prior written authorization of Seller.
18. **Publicity.** Purchaser agrees that it will not disclose or make available to any third party the terms or provisions of this Agreement, including but not limited to the items referred to in paragraph 15, without the prior written authorization of Seller.
19. **Assignment.** Purchaser may not transfer or assign this Agreement without the prior written authorization of Seller.
20. **Order of Precedence.** In the event of a conflict between the terms of this Agreement and any other document presented by Purchaser pursuant to this order, including but not limited to any purchase order issued by Purchaser, the terms of this Agreement shall govern.
21. **Remedies.** Notwithstanding any other provision herein, Seller shall be entitled to seek equitable relief to protect its interests, including but not limited to preliminary and permanent injunctive relief. Nothing herein shall be construed to limit any other remedies available to Seller.
22. **Survival.** Any obligations which by their nature would survive termination of this Agreement, including but not limited to the obligations of confidentiality and indemnification, shall survive such termination.
23. **Severability.** These terms and conditions shall be severable and the invalidity or unenforceability of any of them under any circumstances shall not affect those terms and conditions which are not held to be invalid or unenforceable.
24. **Entire Agreement; Amendment.** These terms and conditions constitute the entire understanding of the parties related to the subject matter hereof and may be amended or modified only by written agreement of the parties to this Agreement.
25. **Governing Law; Jurisdiction.** This Agreement shall be governed by, and interpreted in accordance with, the laws of the State of Texas without giving effect to any choice or conflict of law provision or rule (whether of the State of Texas or any other jurisdiction) that would cause the application of the laws of any jurisdiction other than the State of Texas. Each party agrees (i) that the exclusive jurisdiction for the resolution of any dispute, proceeding, or legal action (jointly "Proceeding") related to this Agreement or the transactions contemplated hereunder shall reside in the state or federal courts located in Dallas, Texas and (ii) not to assert any claim that it is not subject personally to the jurisdiction of such court, that the Proceeding is brought in an inconvenient forum, that the venue of the Proceeding is improper, or that this Agreement may not be enforced in or by such court.

©2016 ACPI All rights reserved.

GLOSSARY OF NOMENCLATURE

NOMENCLATURE	DESCRIPTION
EALDCG	Vetro Aluminum Doors for Single and Two Door Wall Cabinet
EALDCGC	Vetro Aluminum Doors for Corner Wall Cabinet
EB	Base Cabinet
EB_FH	Full Height Door Base Cabinet
EB_WBFH	Full Height Door Base Cabinet with Wastebasket
EBAT	Batten Molding
EBC	Bookcase
EBEP	Base End Panel
EBER	Easy Reach Corner Base Cabinet
EBERS	Easy Reach Corner Base Cabinet with Lazy Susan
EBF	Base Cabinet Filler
EBLB	Blind Base Cabinet
EBLB_FH	Full Height Door Blind Base Cabinet
EBLW	Blind Wall Cabinet
EBLWL	Blind Long Wall Cabinet
EBOC	Base Oven Cabinet
EBOD	Microwave Base Cabinet
EBWC	Base Wine Cabinet
ECLU	Wardrobe Cabinet
ECLD	Wardrobe Cabinet with Drawers
ECLOSETROD	Closet Rod Kit
ECLR	Wardrobe Cabinet with Closet Rod
ECLRD	Wardrobe Cabinet with Drawers and Closet Rod
ECW	Single Door Corner Wall Cabinet
ECWL	Single Door Corner Long Wall Cabinet
EDB-3	Three Drawer Base Cabinet
EDB-4	Four Drawer Base Cabinet
EDD	Desk Cabinet Drawer
EDGEBANDPS	Peel-N-Stick Edge Banding
EDOOR.ONLY	Door as Panel
EDUMMYFRONT.ONLY	Dummy Drawer Front as Panel
EDWR	Dishwasher End Panel
EDWRBOX.ONLY	Drawer Box as Panel
EDWRFRONT.ONLY	Drawer Front as Panel
EFS	Finished Skin
EFV_FH	Full Height Door Floating Vanity Base Cabinet
EFVDB-2	Floating Vanity Drawer Base Cabinet
EFVS_FH	Full Height Door Floating Vanity Sink Base Cabinet
EFVSDBU	Floating Vanity Drawer Sink Base Cabinets
EHAB	Universal Access Base Cabinet
EHAB_FH	Full Height Door Universal Access Base Cabinet

NOMENCLATURE	DESCRIPTION
EHAB_WBFH	Universal Access Full Height Base Cabinet with Wastebaskets
EHABER	Universal Access Easy Reach Corner Base Cabinet
EHABERS	Universal Access Easy Reach Corner Base Cabinet with Lazy Susan
EHABLB	Universal Access Blind Base Cabinet
EHABLB_FH	Full Height Door Universal Access Blind Base Cabinet
EHABOC	Universal Access Base Oven Cabinet
EHABOD	Universal Access Microwave Base Cabinet
EHADB-3	Universal Access Three Drawer Base Cabinet
EHASB	Universal Access Sink Base Cabinet
EHASB_FH	Universal Access Full Height Door Sink Base Cabinet
EHASBRB_FH	Universal Access Adaptable Full Height Door Sink Base Cabinet with Removable Front
EHSK	Heat Shield Kit
EHWSB_PS	Hanging Wall Sink Base Cabinet with Plumbing Skirt
EIUC	Inverted Utility Cabinets
EIVLC	Inverted Vanity Linen Cabinets
ELOCM	Large Outside Corner Molding
ELR	Light Rail Molding
EMC	Microwave Wall Cabinet with Shelf
EOCM	Outside Corner Molding
EOV	Oven Cabinet
EPBP	Peninsula Base Cabinet Back Panel
EPLYSTICK	Peel-N-Stick Backer for Wall Cabinet End Panel
EPLYSTICKBEP	Peel-N-Stick Backer for Base Cabinet End Panel
ESB	Sink Base Cabinet
ESB_FH	Full Height Door Sink Base Cabinet
ESBRB	Two Door Sink Base Cabinet with Removable Front
ESBRB_FH	Full Height Door Sink Base Cabinet with Removable Front
ESCM	Soffit Spacer Molding
ESCMOP	5/8" Scribe Molding
ESHC	Shaker Crown Molding
EST	Base Cabinet Roll-Out Shelf Tray Kits
EST_UC	Utility Roll-Out Shelf Tray Kits
ESTVAL	Valance

NOMENCLATURE	DESCRIPTION
ETEP	Utility End Panel
ETKS	Toe Kick Molding
ETUKIT	Touch-Up Kit
EUC	Utility Cabinet
EUCS	Utility Cabinet Loose Shelf
EUF	Utility Cabinet Filler
EV	Vanity Sink Base Cabinet
EV_FH	Full Height Door Vanity Sink Base Cabinet
EV_H	34-1/2" Vanity Sink Base Cabinet
EV_HFH	34-1/2" Full Height Vanity Sink Base Cabinet
EVB	Single Drawer Vanity Sink Base Cabinet
EVB_H	34-1/2" Single Drawer Vanity Sink Base Cabinet
EVCDB	Door and Drawer Combo Vanity Sink Base Cabinet
EVCDB_H	34-1/2" Door and Drawer Combo Vanity Sink Base Cabinet
EVDB-3	Three Drawer Vanity Base Cabinet
EVDB-4	Four Drawer Vanity Base Cabinet
EVDB_H-3	34-1/2" Three Drawer Vanity Base Cabinet
EVDB_H-4	34-1/2" Four Drawer Vanity Base Cabinet
EVLC	Vanity Linen Cabinet
EVSDBU	Vanity Drawer Sink Base Cabinets
EVW	Vanity Wall Cabinet
EW	Wall Cabinet
EW	Refrigerator Wall Cabinet
EWC	Wine Cube Wall Cabinet
EWEP	Wall Cabinet Decorative End
EWEP	Wall End Panel
EWER	Wall Easy Reach Cabinet
EWERL	Long Wall Easy Reach Cabinet
EWF	Cabinet Filler
EWL	Long Wall Cabinet
EWL	Refrigerator Long Wall Cabinet
EWLVL	Vertical Lift-Up Long Wall Cabinet
EWOC	Open Wall Cabinet
EWVL	Vertical Lift-Up Wall Cabinet

DOOR & DRAWER SIZE TO CABINET REFERENCE CHART

CABINET	WIDTH	HEIGHT	VERT EDGE REVEAL (VR)	HORZ REVEAL (HR)	TOP DRWR FRNT HEIGHT	2nd DRWR FRNT HEIGHT
Single Door Wall	Cab Width - (2*VR)	Cab Height – (2*HR)	0.0625	0.125	n/a	n/a
Double Door Wall	(Cab Width/2) –(2*VR)	Cab Height – (2*HR)	0.0625	0.125	n/a	n/a
Single Door Base FH	Cab Width - (2*VR)	Cab Height – toekick – (3*HR)	0.0625	0.125	n/a	n/a
Double Door Base FH	(Cab Width/2) –(2*VR)	Cab Height – toekick – (3*HR)	0.0625	0.125	n/a	n/a
Single Door Base	Cab Width - (2*VR)	Cab Height – toekick – (4*HR) – Top Dwr Frnt Height	0.0625	0.125	5.75"	n/a
Double Door Base	(Cab Width/2) –(2*VR)	Cab Height – toekick – (4*HR) – Top Dwr Frnt Height	0.0625	0.125	5.75"	n/a
3-Dwr Drawer Base (2 Bottom Drawers)	Cab Width - (2*VR)	(Cab Height – toekick – (5*HR) – Top Dwr Frnt Height)/2	0.0625	0.125	5.75"	n/a
4-Dwr Drawer Base (Bottom Drawer)	Cab Width - (2*VR)	Cab Height – toekick – (6*HR) – Top Dwr Frnt Height – (2* 2nd Dwr Frnt Height)	0.0625	0.125	5.75"	5.875"
Blind Base	Cab Width – 21 – (2*VR)	Cab Height – toekick – (4*HR) – Top Dwr Frnt Height	0.0625	0.125	5.75"	n/a
Blind Base FH	Cab Width – 21 – (2*VR)	Cab Height – toekick – (3*HR)	0.0625	0.125	n/a	n/a
Blind Wall	Cab Width – 15 – (2*VR)	Cab Height – (2*HR)	0.0625	0.125	n/a	n/a
84"H Single Door UC/VLC	Cab Width - (2*VR)	Upper: 29.75" Lower: 49.375"	0.0625	0.125	n/a	n/a
84"H Double Door UC/VLC	(Cab Width/2) –(2*VR)	Upper: 29.75" Lower: 49.375"	0.0625	0.125	n/a	n/a
90"H Single Door UC/VLC	Cab Width - (2*VR)	Upper: 35.75" Lower: 49.375"	0.0625	0.125	n/a	n/a
90"H Double Door UC/VLC	(Cab Width/2) –(2*VR)	Upper: 35.75" Lower: 49.375"	0.0625	0.125	n/a	n/a
93"H Single Door UC/VLC	**Cab Width - (2*VR)**	**Upper: 38.75" Lower: 49.375"**	**0.0625**	**0.125**	**n/a**	**n/a**
93"H Double Door UC/VLC	**(Cab Width/2) –(2*VR)**	**Upper: 38.75" Lower: 49.375"**	**0.0625**	**0.125**	**n/a**	**n/a**
96"H Single Door UC/VLC	Cab Width - (2*VR)	Upper: 41.75" Lower: 49.375"	0.0625	0.125	n/a	n/a
96"H Double Door UC/VLC	(Cab Width/2) –(2*VR)	Upper: 41.75" Lower: 49.375"	0.0625	0.125	n/a	n/a
84"H Single Door IUC/IVLC	**Cab Width - (2*VR)**	**Upper: 49.375" Lower: 29.75"**	**0.0625**	**0.125**	**n/a**	**n/a**
84"H Double Door IUC/IVLC	**(Cab Width/2) –(2*VR)**	**Upper: 49.375" Lower: 29.75"**	**0.0625**	**0.125**	**n/a**	**n/a**
90"H Single Door IUC/IVLC	**Cab Width - (2*VR)**	**Upper: 55.375" Lower: 29.75"**	**0.0625**	**0.125**	**n/a**	**n/a**
90"H Double Door IUC/IVLC	**(Cab Width/2) –(2*VR)**	**Upper: 55.375" Lower: 29.75"**	**0.0625**	**0.125**	**n/a**	**n/a**
93"H Single Door IUC/IVLC	**Cab Width - (2*VR)**	**Upper: 58.375" Lower: 29.75"**	**0.0625**	**0.125**	**n/a**	**n/a**
93"H Double Door IUC/IVLC	**(Cab Width/2) –(2*VR)**	**Upper: 58.375" Lower: 29.75"**	**0.0625**	**0.125**	**n/a**	**n/a**
96"H Single Door IUC/IVLC	**Cab Width - (2*VR)**	**Upper: 61.375" Lower: 29.75"**	**0.0625**	**0.125**	**n/a**	**n/a**
96"H Double Door IUC/IVLC	**(Cab Width/2) –(2*VR)**	**Upper: 61.375" Lower: 29.75"**	**0.0625**	**0.125**	**n/a**	**n/a**
33" Base Easy Reach	8.25"	Cab Height – toekick – (3*HR)	0.0625	0.125	n/a	n/a
36" Base Easy Reach	11.25"	Cab Height – toekick – (3*HR)	0.0625	0.125	n/a	n/a
Wall Easy Reach	11.25"	Cab Height – (2*HR)	0.0625	0.125	n/a	n/a
Desk Drawer	Cab Width - (2*VR)	Cab Height – (3*HR)	0.0625	0.125	4.375"	n/a

CABINET	WIDTH	HEIGHT	VERT EDGE REVEAL (VR)	HORZ REVEAL (HR)	DRWR FRNT HEIGHT	DRWR FRNT WIDTH
84"H 3-Dwr Ovens	(Cab Width/2) –(2*VR)	17.75"	0.0625	0.125	9"	Cab Width – (2*VR)
84"H 1-Dwr Ovens	(Cab Width/2) –(2*VR)	17.75"	0.0625	0.125	9"	Cab Width – (2*VR)
90"H 3-Dwr Ovens	(Cab Width/2) –(2*VR)	23.75"	0.0625	0.125	9"	Cab Width – (2*VR)
90"H 1-Dwr Ovens	(Cab Width/2) –(2*VR)	23.75"	0.0625	0.125	9"	Cab Width – (2*VR)
93"H 3-Dwr Ovens	**(Cab Width/2) –(2*VR)**	**26.75"**	**0.0625**	**0.125**	**9"**	**Cab Width – (2*VR)**
93"H 1-Dwr Ovens	**(Cab Width/2) –(2*VR)**	**26.75"**	**0.0625**	**0.125**	**9"**	**Cab Width – (2*VR)**
96"H 3-Dwr Ovens	(Cab Width/2) –(2*VR)	29.75"	0.0625	0.125	9"	Cab Width – (2*VR)
96"H 1-Dwr Ovens	(Cab Width/2) –(2*VR)	29.75"	0.0625	0.125	9"	Cab Width – (2*VR)

studio full access®
CABINET SERIES

www.studiofullaccess.com

Proudly Made in America An acpi brand

Trademark owned by ACProducts, Inc.
©ACPI SPECBOOKSTDFLLACSS 09/19 Printed in the United States of America

Studio Full Access Cabinets are certified by the Kitchen Cabinet Manufacturers Association.

NKBA National Kitchen & Bath Association

Kitchen Cabinet Manufacturers Association
Environmental Stewardship Program
All Products Impact the Environment
For ESP Program Criteria, Visit kcma.org

Studio Full Access Cabinets is part of the Kitchen Cabinet Manufacturers Association (KCMA) and the National Kitchen and Bath Association (NKBA). Studio Full Access Cabinets carries the ANSI/KCMA A161.1 quality assurance certification.

NOTICE: The product specifications appearing herein supersede and cancel all previous sheets, supplements and addenda, and represent current manufacturing standards and procedures. Studio Full Access Cabinets reserves the right to make specification changes for continued product improvement.

NOTE: Due to printing limitations, color pictures cannot be guaranteed to exactly match the actual cabinet material.